VOL. 16 NOTES FROM THE SHOP NO. 95

Woodsmith®

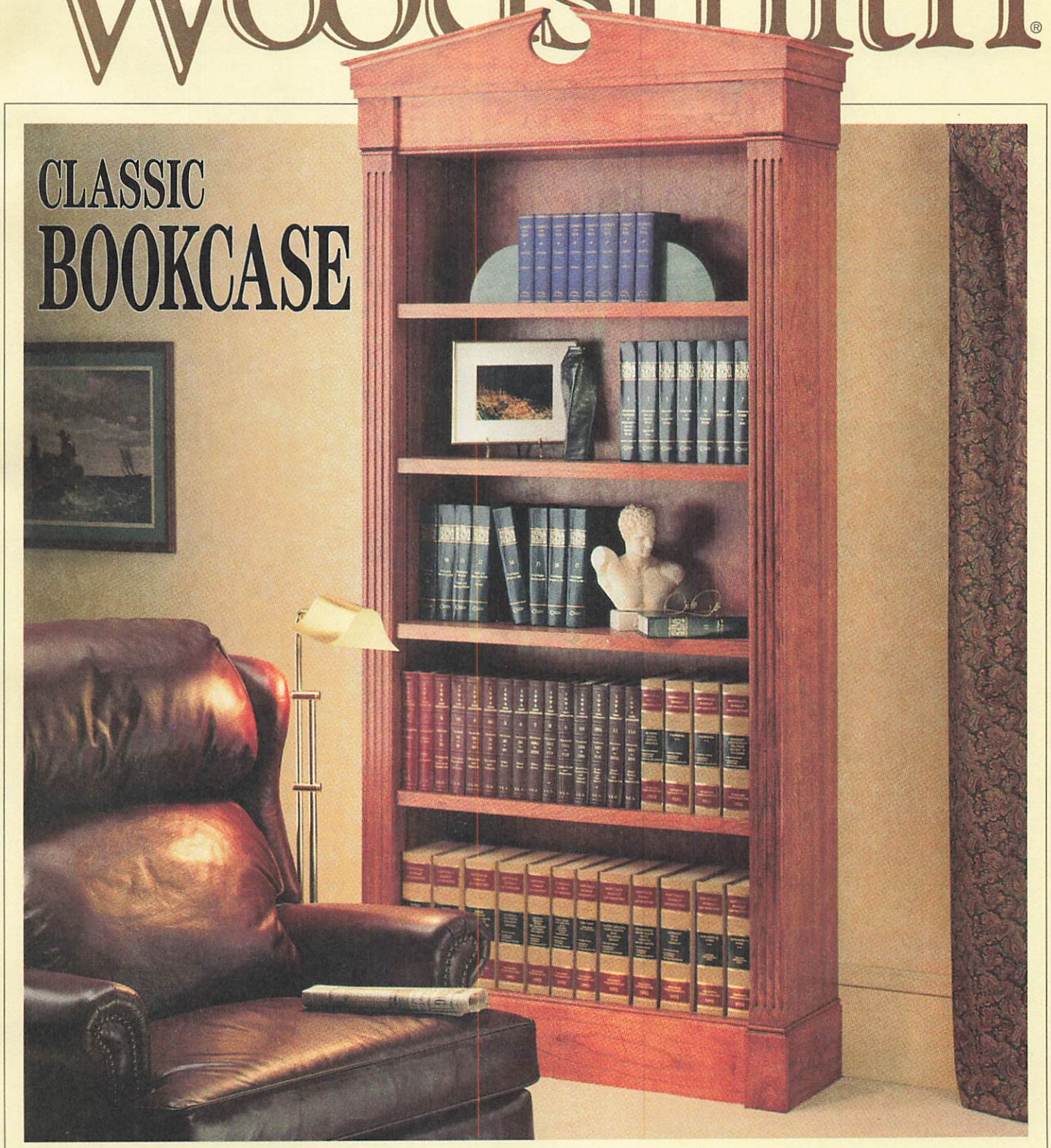

CLASSIC BOOKCASE

No. 95 October, 1994

Woodsmith®

Editor Donald B. Peschke
Executive Editor Douglas L. Hicks
Managing Editor Terry J. Strohman
Assistant Editors James M. Dolan, Jonathan Garbison, Mark A. Williams

Creative Director Ted Kralicek
Art Director Rod Stoakes
Senior Illustrators David Kreyling, Cinda Shambaugh
Illustrators Dirk Ver Steeg, Mark Higdon
Photographer Crayola England
Electronic Graphics Chris Glowacki
Design Director Ken Munkel
Senior Designer Kent Welsh
Shop Manager Steve Curtis
Shop Asst./Facilities Steve Johnson

Circulation Director Liz Bredeson
Subscription Manager Sandy Baum
Newsstand Sales Kent A. Buckton

PUBLISHING SERVICES

Managing Editor: Gordon Gaippe • *Graphic Artist:* Cheryl L. Cynor

CORPORATE SERVICES

Planning Director: Jon Macarthy • *Controller:* Robin Hutchinson • *Account.:* Laura Thomas • *Bookkeeping:* Julie Greenlee • *Production Mgr.:* Carol Quijano • *Info. Serv. Mgr.:* Joyce Moore • *Elec. Pub. Coord.:* Douglas M. Lidster • *Applic. Spec.:* Linda Morrow • *Sup. Asst:* Nick Thielen • *Admin. Assistants:* Cheryl A. Scott, Julia Fish • *Receptionist:* Jeanne Johnson • *Build. Maint.:* Ken Griffith

WOODSMITH MAIL ORDER

Marketing Dir.: Robert Murry • *Art Dir.:* Cindy Jackson • *Fulfillment Mgr.:* Valerie Wiese • *Catalog Prod. Mgr.:* Bob Baker • *Inv. Control/Prod. Mgr.:* Mark Mattiussi • *Proj. Supplies:* Linda Jones • *Tech. Support:* Jeff Janes • *Recept.:* Cynthia Kerman

CUSTOMER SERVICE

Supervisor: Jennie Enos • *Customer Service Reps.:* Jennifer Murphy, Joy Krause, Sara Kono, Anna Cox, Lonnie Algreen, Karla Cronin

SHIPPING DEPARTMENT

Supr: Nancy Johnson • *Fulfillment:* Gloria Sheehan, Donnie McVey, Chuck Carlson, Sylvia Carey

WOODSMITH STORE

Manager: Dave Larson • *Assistant Manager:* Paul Schneider • *Sales Staff:* Wendell Stone, Pat Lowery • *Office Manager:* Vicki Edwards

Woodsmith® (ISSN 0164-4114) is published bimonthly (Feb., Apr., June, Aug., Oct., Dec.) by Woodsmith Corp., 2200 Grand, Des Moines, IA 50312.
Woodsmith® is a registered trademark of Woodsmith Corp. Copyright© 1994 Woodsmith Corporation. All rights reserved.
Subscriptions: Single copy: $3.95. One year subscription (6 issues), $19.95. Two years (12 issues), $35.95. (Canada/Foreign add $5 per year, U.S. funds.)
Second Class Postage Paid at Des Moines, IA and at additional offices.
Postmaster: Send change of address to *Woodsmith*, Box 10718, Des Moines, IA 50350.
Subscription Questions? Call **1-800-333-5075**, 8:00 am to 5:00 pm, Central Time, weekdays.
PRINTED IN U.S.A.

EDITOR'S COLUMN

Sawdust

Research. It's one of the first things we do when we start to design a project. This is especially important if we're planning to build a traditional piece of furniture. (Like the Classic Bookcase featured on page 6.)

More than anything else what we're looking for is inspiration. Typically, this means spending some time in the library reviewing old furniture designs. We almost always find some feature or design element that we can use as an inspiration for creating the look we want.

However, we ran into an inspirational roadblock when it came time to design the bookcase for this issue. From the start the idea was to design a *classic* bookcase. The trouble was we were having a devil of a time coming up with the look we wanted. And none of the traditional furniture we looked at seemed to offer much inspiration.

So we took a slight detour, instead of looking at traditional furniture we began looking at traditional *architecture*. That was all it took to get us on the right track.

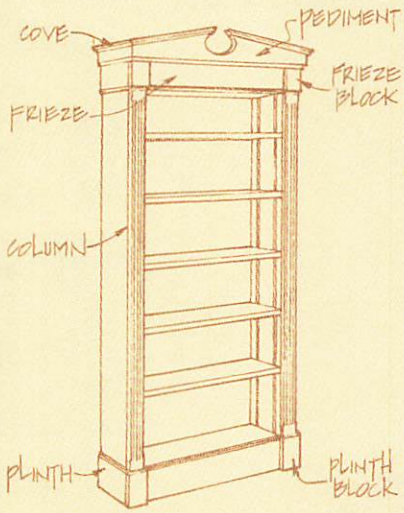

The end result was a design that used traditional architectural elements to create a classic woodworking project, see the drawing.

Once the look of the project had been determined the next step was to work out the construction details. Typically, a project is built in the workshop and then moved to another location. But this can be difficult to do with a tall project like the bookcase. (At its highest point, it's over seven and a half feet tall.)

The solution was to design the bookcase so it could be built in sections (or components). The sections are held together with knock-down hardware. This allows you to break down the bookcase into parts that are easy to move. But enough about the bookcase, there are a couple of other things I want to tell you about.

NEW FACE. As most of you know I like to introduce new members of the *Woodsmith* family. Well this time I get to introduce a new face and a new position. Jon Macarthy has joined us as Planning Director. Basically, Jon will be helping me try to understand all the pages of numbers the Circulation and Accounting departments keep piling on my desk. (Pretty exciting stuff, right?) Actually I'm hoping that I can spend less time reading reports and more time down in the shop.

E-MAIL. A couple of months ago we set up an electronic (computerized) mail system between the offices here at *Woodsmith*. At first I was a little skeptical, but I've found it a convenient way to write a quick message to someone, or schedule a meeting with everyone in the company.

It's turned into such a great communication tool that I got to thinking about how we could use it to communicate with readers. I've always felt that finding out what our readers want to see in *Woodsmith* and sharing information is the most important thing we can do.

So we decided to join a couple of on-line computer services: Prodigy and CompuServe (and gain access to the Internet).

Now we're thinking about other electronic services we can provide readers. If you've got any ideas along these lines or have a computer and modem and want to visit with us or ask a question, the lines are now open. Send E-mail through any of the following:

(Attn: *Woodsmith*):
Prodigy: EDJE97A
CompuServe: 75330,2301.
Internet 75330.2301@compuserve.com.

P.S. If you don't understand the last three paragraphs, don't worry. (I didn't understand them myself until recently.) You can still send us a letter the old-fashioned way — with a stamp.

Don

Contents

FEATURES

Classic Bookcase 6

This project looks traditional, but it uses simple joinery and knock-down hardware. The result is an impressive bookcase that's much easier to build than it looks.

Cutting Board 16

This Cutting Board is built from small blocks with the end grain facing up. This looks good and is extremely durable. And it's not built one block at a time — there's a quicker and easier way.

Assembly Tips 20

Useful information for cutting, gluing, flattening, and smoothing the Cutting Board. Or any other project made with the end grain facing up.

Clearing the Air 22

Heavy-Duty Shop Filter: *This unit uses a furnace blower and three filters to clean the air in the whole shop.*
Small Area Shop Filter: *This economical unit uses a pair of bathroom exhaust fans and a single filter.*

Oil Finishes 28

There are a lot of oil finishes available today. Here are some helpful tips so you can choose the right one for your projects.

Fluting Jig 30

With this shop-built jig, you can rout a series of decorative flutes that are parallel and equally spaced.

DEPARTMENTS

Tips & Techniques 4
Shop Notes 14
Sources 31

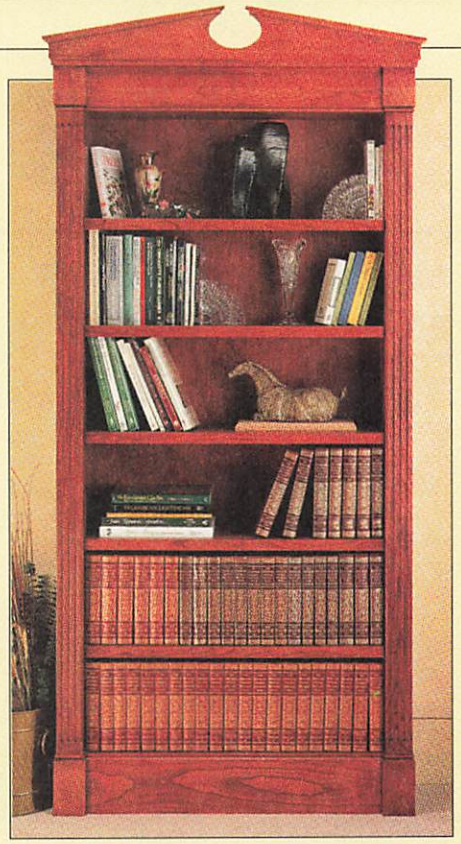

Classic Bookcase *page 6*

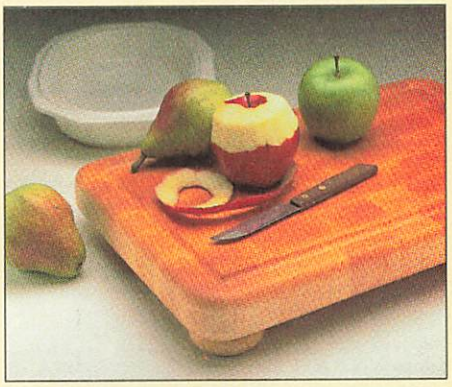

Cutting Board *page 16*

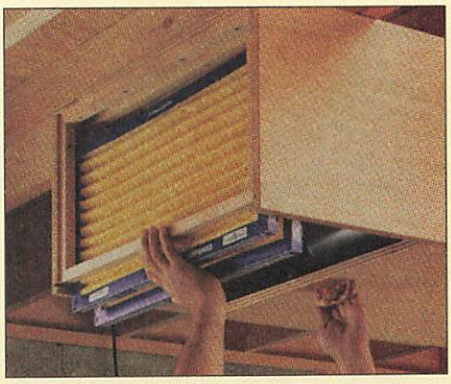

Shop Dust Filters *page 22*

Tips & Techniques

MITER JOINT CLAMP

■ It's a challenge gluing miter joints. There just isn't an easy way to clamp them together.

In the past I've tried a variety of store-bought clamps. But they don't always pull the joint together. So I came up with a shop-built corner clamp that pushes (or presses) the mitered pieces together with wedges.

This corner clamp uses a piece of plywood for a base. A square block of wood and two outside braces are glued and screwed on top, see Fig. 1.

The important thing is to be sure the square block is really square. Double check that the inside corner is cut exactly 90°. Then align the two outside braces parallel with the two sides of the block.

A pair of wedges does all the work. They apply pressure to the mitered pieces in two directions at the same time. When the inside wedge (the one in contact with the mitered piece) is tapped forward, it pushes the mitered joint tighter together and firmly holds the pieces in place, see Fig. 2.

George Clark
East Windsor, New Jersey

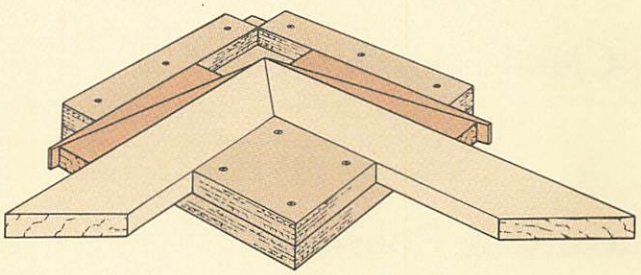

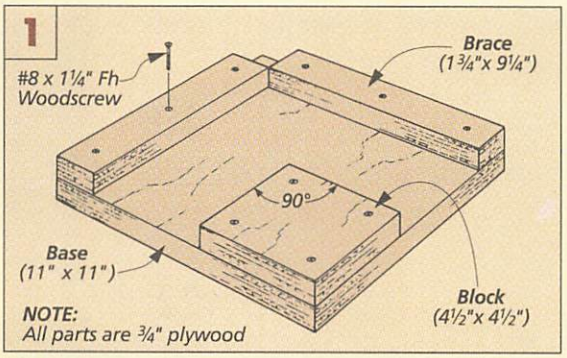

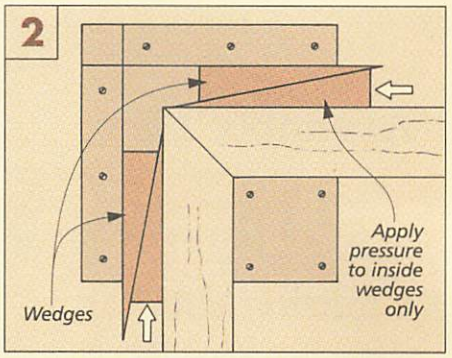

WEDGE CLAMP

■ When edge gluing, biscuits are a quick and easy way to align the boards. But the problem is, it seems like more time is spent clamping and unclamping the boards than cutting the slots. And the clamps can leave marks on the wood.

So I came up with a simple and inexpensive solution — a wedge clamp. It's basically two pieces of plywood separated from each other by a wedge-shaped spacer, see Fig. 1.

The wedge spacer is the heart of the clamp. It's a thin strip of wood that I bevel-ripped from the edge of a 2x4, see Fig. 2. The thickness of the spacer determines the size of the opening between the top and base pieces. This opening must be small enough so a board is wedged in place before it contacts the spacer, see Fig. 1a.

The way it works is the top forces the workpiece against the base as it slides into the clamp, see photo. Friction between the boards holds everything securely. Now I don't have to waste time using clamps. And, I don't have to worry about protecting the board from clamp marks.

Dave Standrich
Mulvane, Kansas

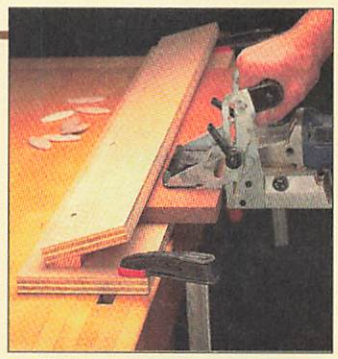

▲ *This wedge clamp grabs a workpiece securely and lets go quickly. With no moving parts.*

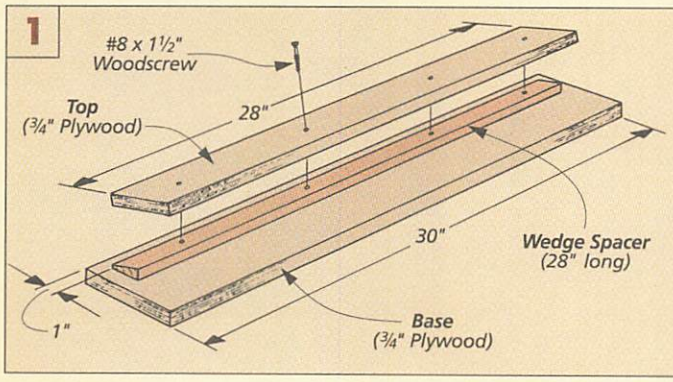

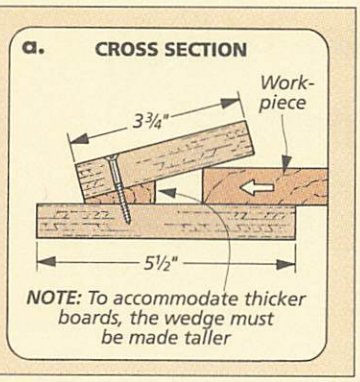

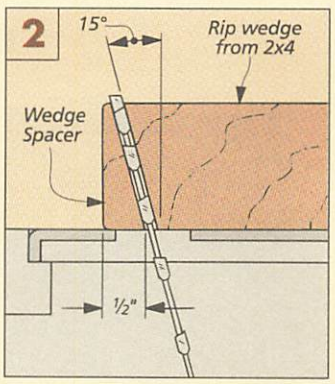

BOOTLACE STROP

■ I used to put off sharpening my chisels until they were dull. But now I hone them regularly with a power strop. This way, they don't need to be sharpened nearly as often.

This strop uses a leather bootlace wrapped tightly around a dowel. This 1¼"-dia. dowel has a slot cut on one end with a hole at the other end, see Fig. 1. A small hole is drilled in the side.

Wedge the bootlace in the slot and wrap it around the dowel in a clockwise direction, see Fig. 2. Note: Keep the tanned side (dark side) facing the dowel.

Then screw a hex head bolt into the hole to hold the bootlace in place, see Fig. 3. Cut off the bolt head to form the arbor.

To use the strop, set the drill press at a slow speed and apply honing compound to the bootlace. Safety Note: Hold the chisel so the strop rotates away from the cutting edge to keep it from grabbing, see photo.

Stew Slack
Edmonton, Alberta

▲ *Use a slow speed and hold the chisel so the strop is turning away from the tool.*

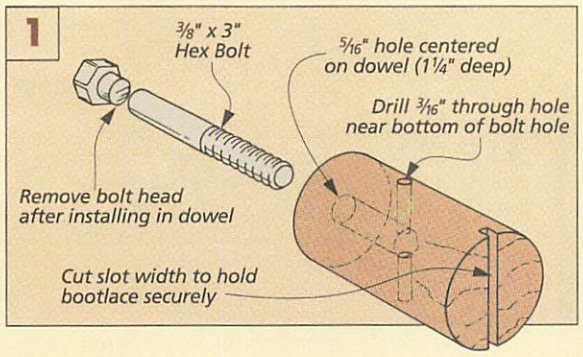

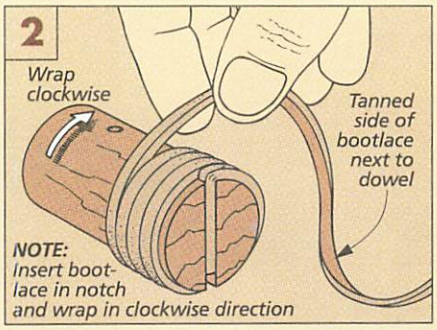

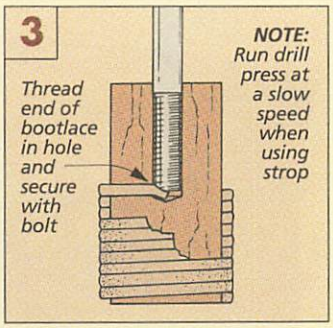

PICTURE FRAME RETAINER

■ I've always had a problem finding a good way to hold a picture in its frame. Those little triangle-shaped glazier points you push into the wood never work very well on hardwood. And using small brads near the edge can split the wood.

Now I hold pictures in place with panhead screws and fender washers. The secret is creating a recess for the washer to sit in.

To do that, use a Forstner bit to drill holes on the back of the frame, see Fig. 1. The holes are drilled larger than the washers and overlap the edge of the frame. When the washers are installed, they stick out from the frame and hold the picture in place, see Fig. 2.

And the center hole left by the spur on the Forstner bit is the perfect size for a woodscrew.

Leroy Pluard
Vancouver, Washington

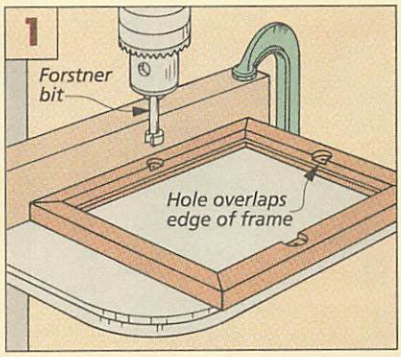

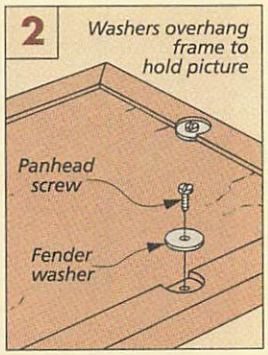

"BUNGEE" CORD CLAMP

■ I build a lot of projects that require built-up pieces of molding (like small picture frames). The pieces can be hard to clamp together. But I've found that common "bungee" cords work well.

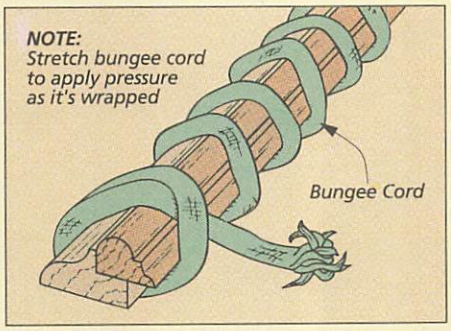

A bungee cord will conform to any shape and won't mar the wood. Just wrap it around the molding and tie a knot to hold it in place. The bungee squeezes the molding like a boa constrictor. (The larger the diameter the tighter it squeezes.)

At my hardware store, the bungee cords come on spools, so you can buy the exact length that you need.

Paul Ruggiero
Millbrae, California

QUICK TIP

PLAN PROTECTOR

■ I work from full-size furniture plans whenever possible. But they take up a lot of space on my workbench. And before I'm halfway through the project, they're usually torn and dirty.

So I tape my plans to a window shade. It pulls down like a geography map — the kind you'd find at school. Now I roll my plans back up out of the way when I'm done. So they're well protected.

Walter Stecker
Garden Grove, California

SUBMIT YOUR TIPS

If you would like to share an *original* shop-tested tip, send it to *Woodsmith*, Tips and Techniques, 2200 Grand Avenue, Des Moines, Iowa 50312. Or if it's easier for you, FAX it to us at: 515–282–6741.

If we publish the tip, we will send you $30 to $150, depending on the published length. Include a brief explanation and sketch (or photo). And don't worry, we'll rewrite the tip and redraw the art if necessary. Also, *please* include a daytime phone number.

Classic Bookcase

It's what you don't see that makes this project unique. Knock-down hardware is hidden within the sides. So it's easy to assemble and convenient to move.

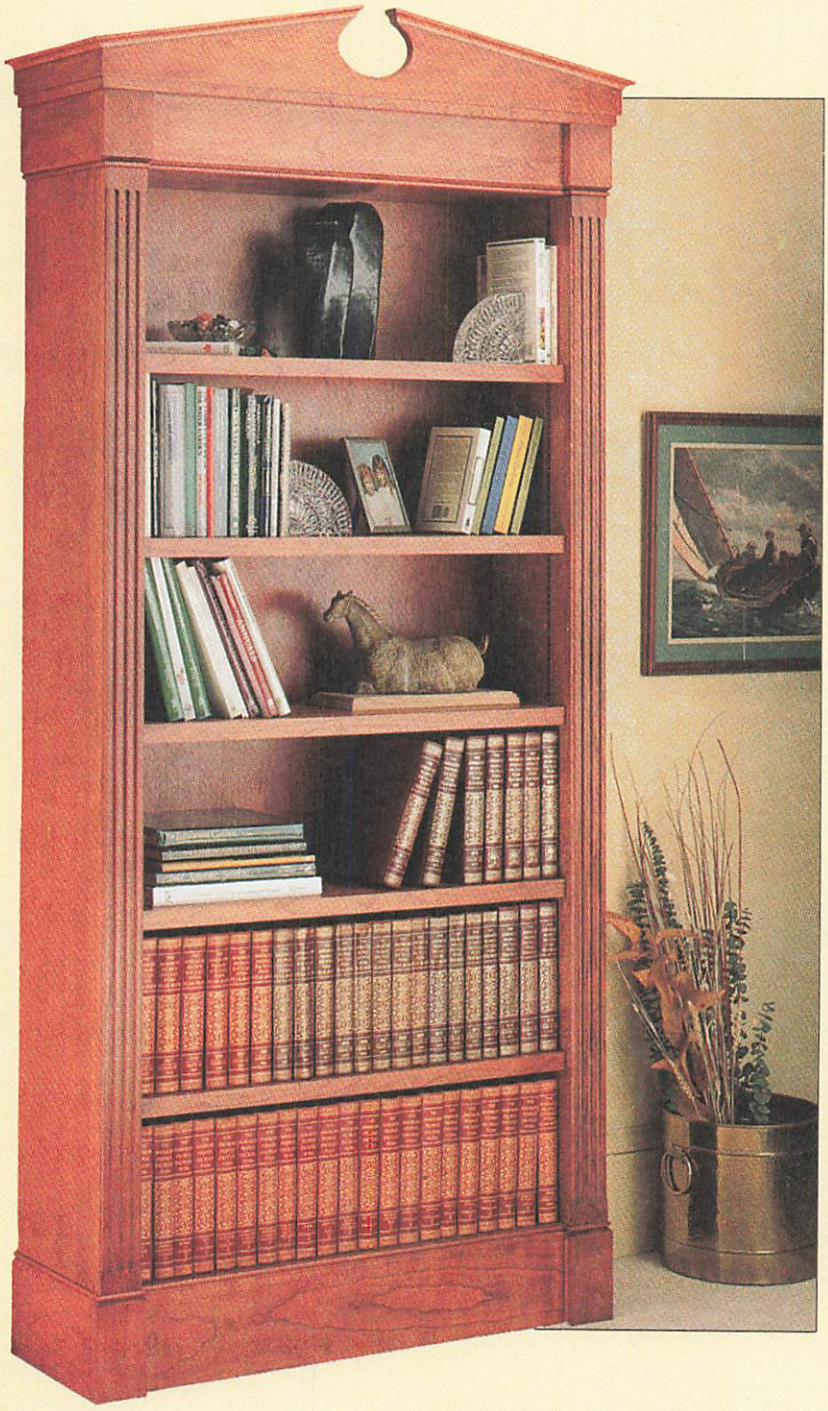

I've always wanted to build a large, formal-looking bookcase. But I had visions of wrestling it around my shop when the time came to assemble and finish it.

The design of this Bookcase changed all that. A simple, straightforward system breaks the project down into manageable sized pieces that are easy to handle.

To see what's special about the design, you need to look behind the plywood back. Here you'll find a "knock-down" system using bolts and nuts to hold things together. Not something you'd expect on a classic piece of furniture.

What makes this system work are the individual components used to build the Bookcase. The base, sides, and top are all built as separate assemblies. Once they're all completed you just bolt them together.

And it's just as easy to take it apart. You won't need to hire a moving crew if you get tired of it sitting in the living room.

Another benefit to using components is being able to change the overall appearance. By replacing the top assembly, the project takes on a completely new look. For example, the classic top with the oval can be replaced with a straight one. (See page 11 for an alternate top.)

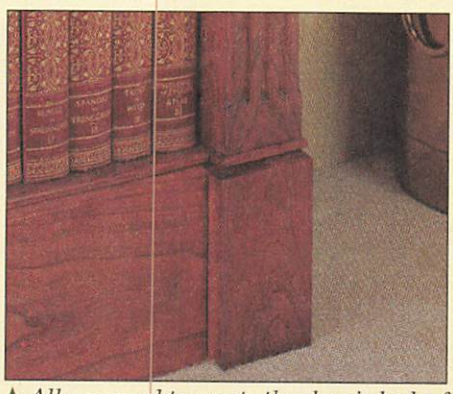

▲ *All you need to create the classic look of fluted columns is a router and the simple fluting jig that's shown on page 30.*

EXPLODED VIEW

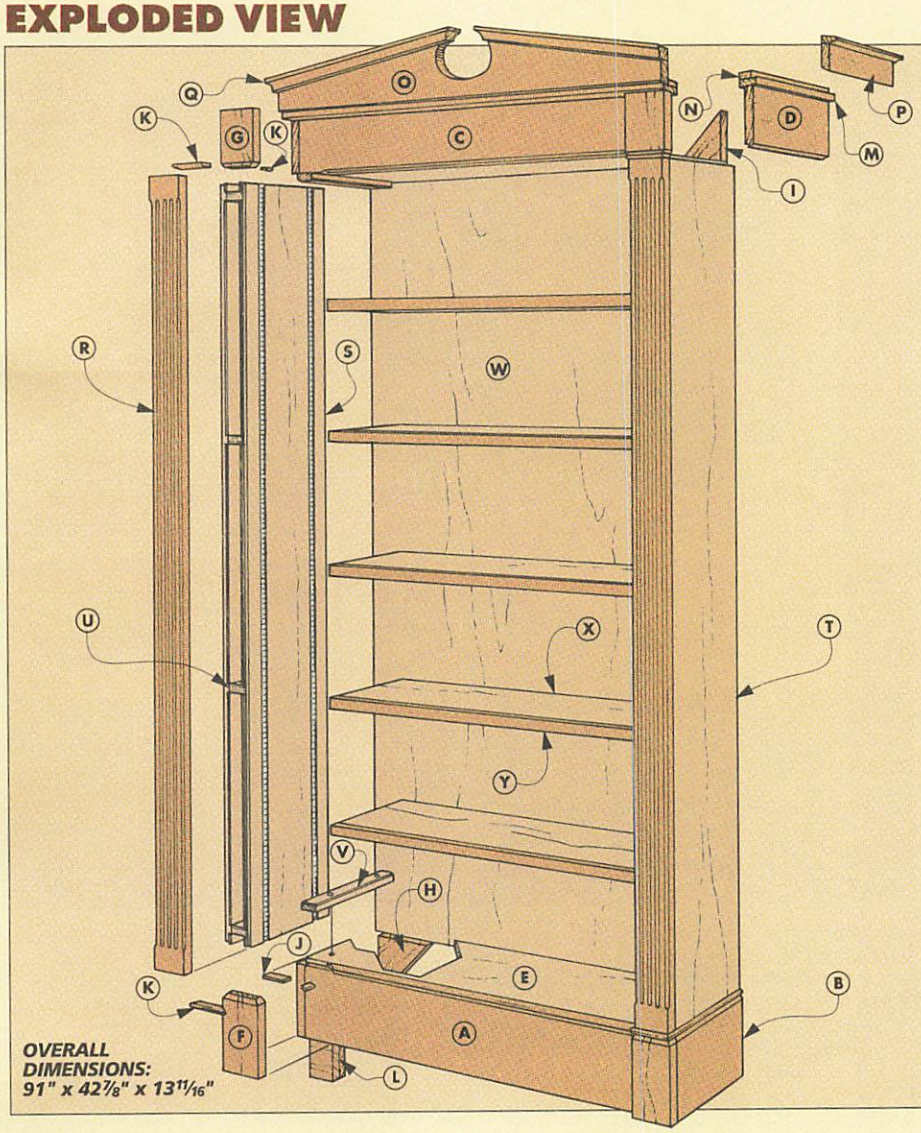

MATERIALS

A	Lower Case Front (1)	¾ x 6⅝ - 39⅝
B	Lower Case Sides (2)	¾ x 6 ⅝ - 11 13/16
C	Upper Case Front (1)	¾ x 4⅝ - 39⅝
D	Upper Case Sides (2)	¾ x 4⅝ - 11 13/16
E	Top/Bottom Panels (2)	¾ ply - 11 3/16 x 39⅞
F	Lower Case Blocks (2)	¾ x 3⅝ - 6⅝
G	Upper Case Blocks (2)	¾ x 3⅝ - 4⅝
H	Filler Pieces (4)	⅜ x ¾ - 2⅛
I	Lower Corner Blks. (2)	¾ x 4¼ - 8½
J	Upper Corner Blks. (2)	¾ x 2⅞ - 5⅝
K	Bead Molding (1)	⅜ x ⅝ - 14 feet
L	Leveler Blocks (4)	¾ x 5¾ - 2⅛
M	Top Molding (1)	¾ x 1¾ - 78
N	Cleat (1)	¾ x 1¼ - 78
O	Top Front (1)	¾ x 6 - 44 (rgh.)
P	Top Sides (2)	¾ x 3 - 14 (rgh.)
Q	Cove Molding (1)	¾ x 1⅜ - 78
R	Fluted Caps (2)	¾ x 3¾ - 84 (rgh.)
S	Interior Panels (2)	¾ ply - 11½ x 72
T	Exterior Panels (2)	¾ ply - 11¾ x 72
U	Ribs (8)	¾ ply - 2 x 11¼
V	Alignment Blocks (4)	¾ ply - 1½ x 11¼
W	Back (1)	¼ ply - 38½ x 73½
X	Shelves (5)	¾ ply - 10½ x 33 15/16
Y	Trim Pieces (5)	¾ x 1¼ - 33 15/16

SUPPLIES

- (68) #8 x 1¼" Fh Woodscrews
- (8) ¼-20 x 3" Hex Head Bolts
- (8) ¼" Flat Washers
- (8) ¼-20 T-Nuts
- (2) 1⅛"-dia Levelers with T-Nuts
- (4) 72" Shelf Standard Brackets (Brown)
- (52) Bracket Nails (Brown)
- (20) Shelf Supports (Brown)

CUTTING DIAGRAM

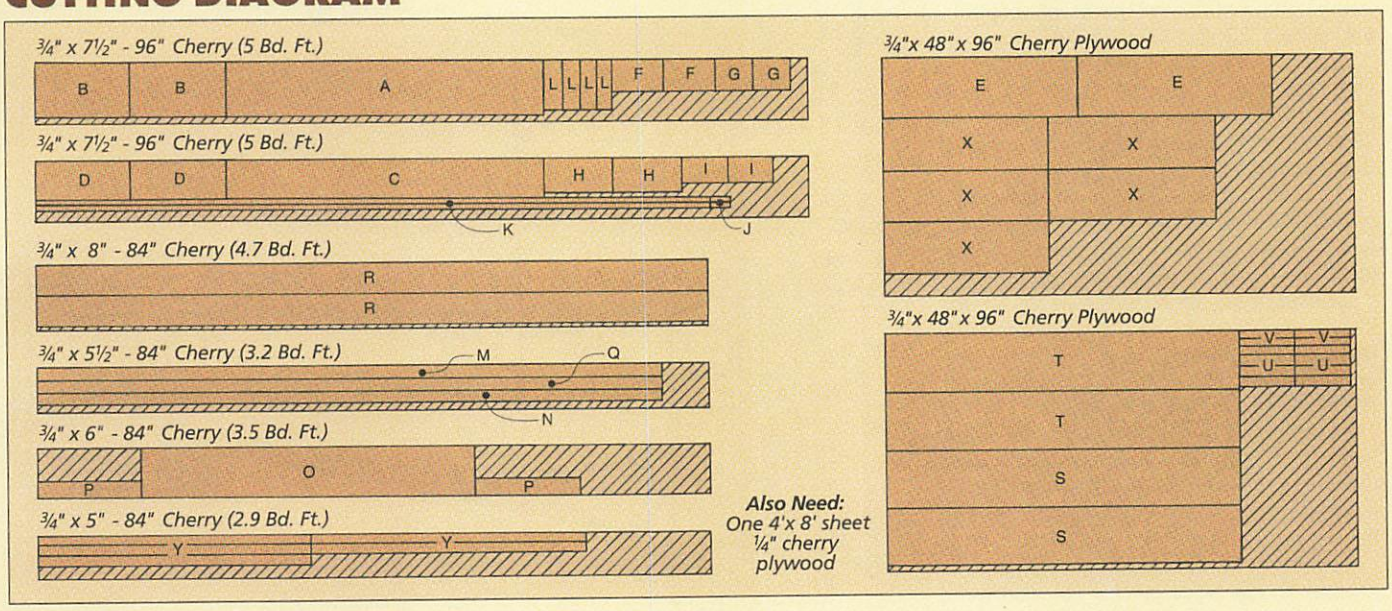

UPPER & LOWER CASE

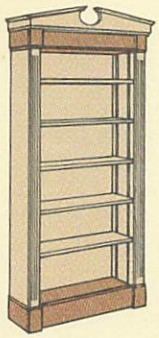

This Bookcase is built in separate assemblies. Normally, I'd build them one at a time. But here, the upper and lower case assemblies are almost identical. (The upper case is 2" shorter than the lower one.) Building them at the same time reduces the number of setups that I need to make.

FRONTS & SIDES. Both the upper and lower case assemblies consist of a front and two side pieces. Plywood panels are added later. I started work on the **lower case front (A)** and **sides (B),** see Fig. 1. I cut them to finished size and then repeated the same steps to make the **upper case front (C)** and **sides (D)**.

Next, I used a locking rabbet joint to hold the front and side pieces together, see Fig. 2. A tongue cut on the front pieces fits in a ¼"-deep dado cut on the side pieces. The important thing here is to make the tongue fit snug in the dado.

After cutting the tongue, I rabbeted the top edge of the lower case assembly and the bottom edge of the upper case assembly, see Fig. 3. These rabbets will hold a top and bottom panel which are made next.

TOP/BOTTOM PANELS. To determine the length of the **top/bottom panels (E)**, dry assemble the fronts and sides together and measure the distance between the rabbets on the sides, see Fig. 4.

Then to determine the width, measure from the rabbet on both front pieces to the back edges of the sides. But you need to leave room for the plywood back (added later). So the width of each panel is cut so it's ¼" short of the back edge, see Fig. 4a. In my case, the finished size of both top/bottom panels (E) was 11 3/16" x 39 7/8".

After the panels are cut to size, the next step is to rabbet three edges of each panel (front and side edges), see Figs. 4 and 4a. This rabbet creates a "shelf" for molding that's added later, refer to Fig. 9.

Once both panels have been rabbeted, I glued the upper/lower case sides, fronts, and panels together. Clamp the pieces and check that everything remains square.

CASE BLOCKS. The next step is to add **lower case blocks (F)** and **upper case blocks (G)**. The blocks cover up the end grain on the side pieces, and they help give the Bookcase a distinctive look.

Both sets of blocks are cut to the same width (3 5/8"). But the height of each set is determined by the height of the upper and lower assemblies, see Fig. 5. Note: For more on cutting the blocks see page 14.

You might be tempted to glue the blocks directly to the front pieces. But the wood

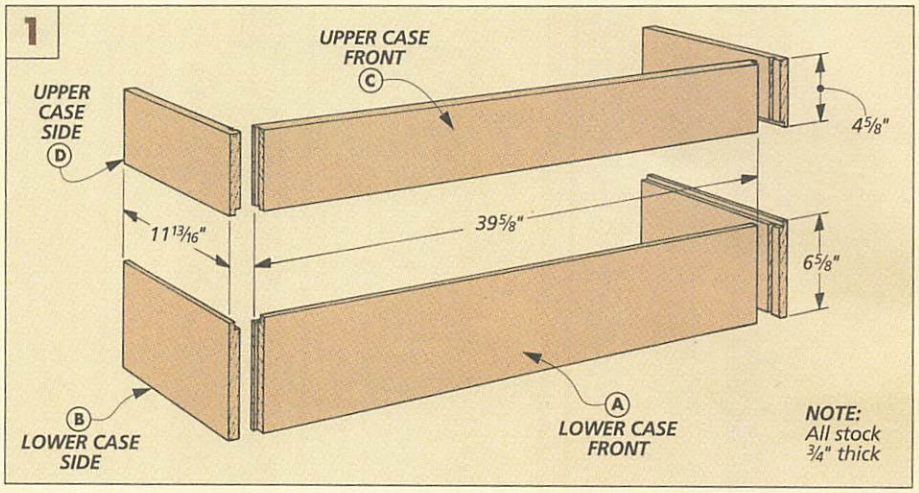

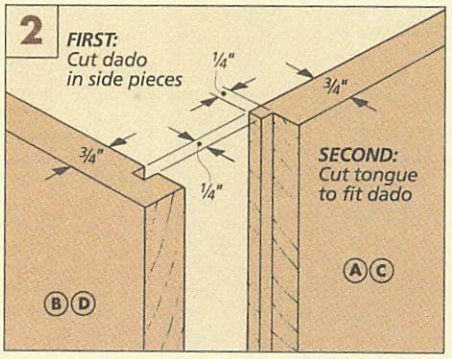

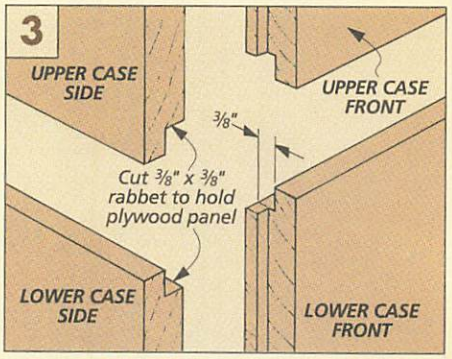

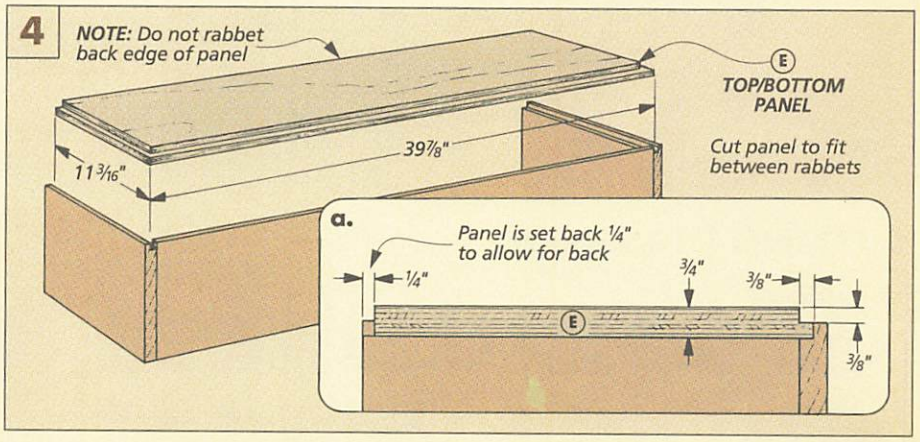

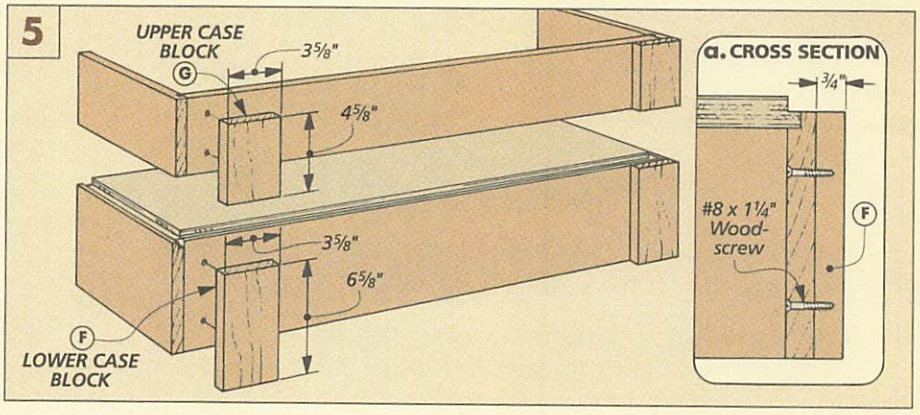

grain on the blocks runs in a different direction than the front pieces. So there's a good chance the blocks would "pop-off" if the wood moved from changes in humidity.

Instead, I drilled two countersunk shank holes through the case fronts and screwed the blocks in place, see Fig. 5a.

FILLER PIECES. Next I wanted to fill in the space between the case blocks and plywood panel on each case assembly. To do that, I cut 3/8"-thick hardwood **filler pieces (H)** and glued them in place, see Fig. 6.

CORNER BLOCKS. Then I turned the upper/lower case assemblies around so I could add **lower corner blocks (I)** and **upper corner blocks (J)** at the back corners, see Fig. 7. These triangle-shaped blocks add support to the top/bottom panel on each assembly. To install the blocks, simply glue and screw them in place.

Note: The blocks are installed flush with the back edge of the plywood panels.

CHAMFER EDGES. After installing the corner blocks, I turned the upper and lower assemblies over and routed a chamfer around three edges, see Figs. 8 and 8a. Note: For more on this see page 14.

The only problem is the chamfer bit won't cut a square inside corner. So to clean up the inside corners next to the case blocks, I used a sharp chisel and followed the profile of the bevel, see Fig. 8b.

BEAD MOLDING. The next step is to make the **bead molding (K)**. The molding fits on the rabbeted edge on both the upper and lower case assemblies, see Fig. 9.

First I cut the molding to size, see Fig. 9a. Then I used a 3/16" round-over bit in the router table to rout a bullnose profile on one edge of each piece. Note: I made extra molding in case it was needed.

When installing the molding, cut the long pieces first (the ones that cover the lower and upper case fronts). That way if you cut one a little short, it still can be used for the side pieces. Then work your way around to the sides, cutting and fitting the pieces as you go. Finally, glue all the pieces in place.

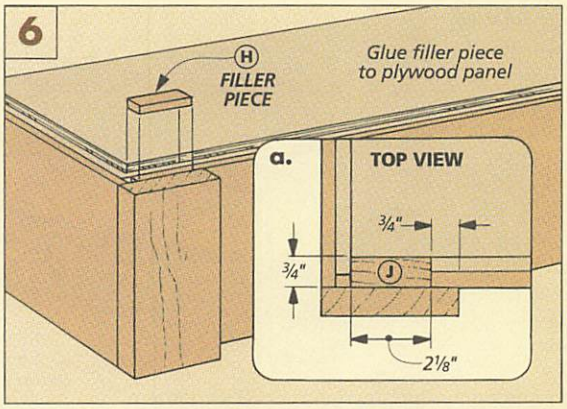

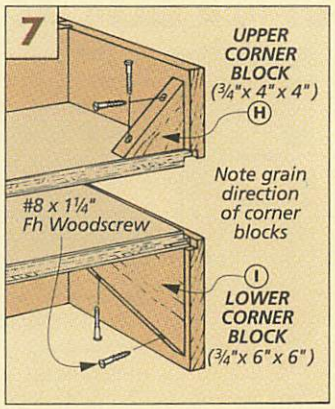

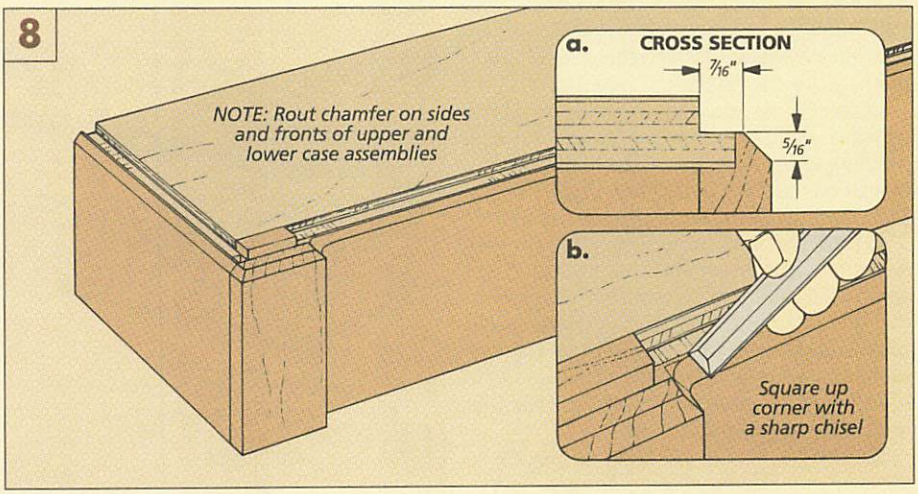

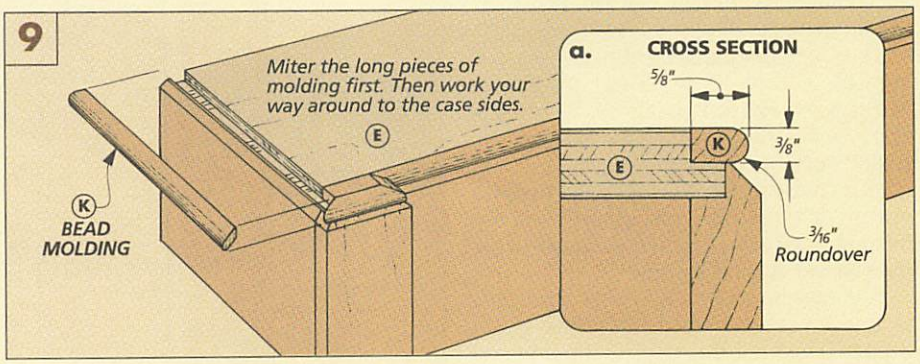

LEVELER BLOCKS

Because the Bookcase stands so tall, levelers are added to the lower case assembly to keep the back tight against the wall. To hold these levelers, I added leveler blocks at both front corners, see Fig. 10. The leveler blocks also act as glue blocks and help strengthen the corners.

Each **leveler block (L)** is glued up from two pieces of 3/4"-thick stock. A T-nut is installed in one end and the levelers screw into the nut, see Fig. 10a.

When installing the blocks, position them up tight against the plywood panel. Then glue and clamp them in place.

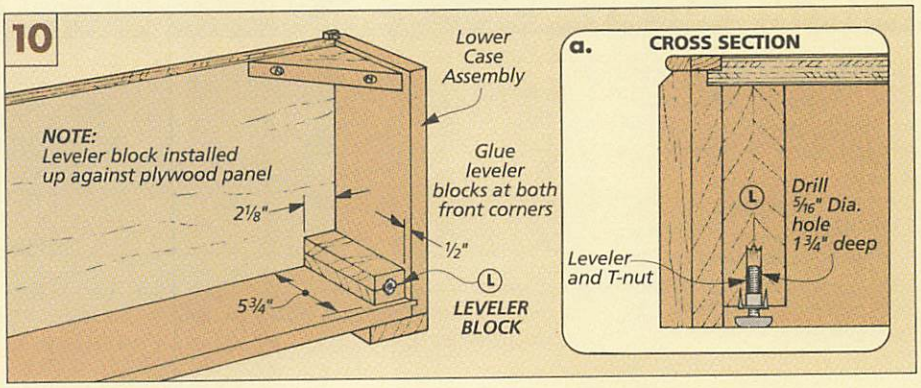

UPPER CASE MOLDING

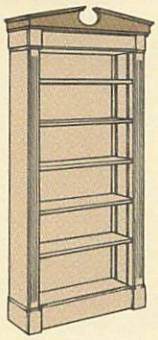

At this point, the lower case assembly is done, so you can set it aside for now. But there's still work to do on the upper case.

When it's complete, the upper case assembly will look like the roof on a house. And like a roof, it isn't added all at once. Instead, several layers of molding are stacked one on top of the other.

TOP MOLDING. The first piece of molding added to the upper case is the **top molding (M)**, see Fig. 11. The molding starts out as a single workpiece cut into three pieces. It's the base for the rest of the molding.

Installing the molding is pretty straightforward. Simply miter the pieces so the molding overhangs the sides and the case blocks on the front by ¼", see Figs. 11a and 11b. Then glue and screw them in place.

CLEAT. The next "layer" added to the top assembly is the **cleat (N)**, see Fig. 12. Here again a single board is cut into three pieces.

The 1¼"-wide cleat is installed so its back edge is flush with the back edge of the top molding, see Fig. 12a. This creates a ½"-wide "shelf" on the sides and front for the next layer of molding to rest on.

TOP FRONT. Once the cleat is installed, the next piece that's added to the top assembly is the **top front (O)**, see Fig. 13. (Note: For an alternate design see next page.)

The top front is a beveled piece of molding with an oval cut out of the middle and two tapered sides. I cut the beveled ends first, see Fig. 13a. And then marked the centerline of the length of the board.

From the center of the top front I drew an oval. (For more on drawing ovals see the box below.) Then I marked the location for the tapered cuts on the sides.

I cut out the oval with a sabre saw close to the line and finished up with a drum sander. Then cut the tapers and glue and clamp the top front to the cleat, see Fig. 13b.

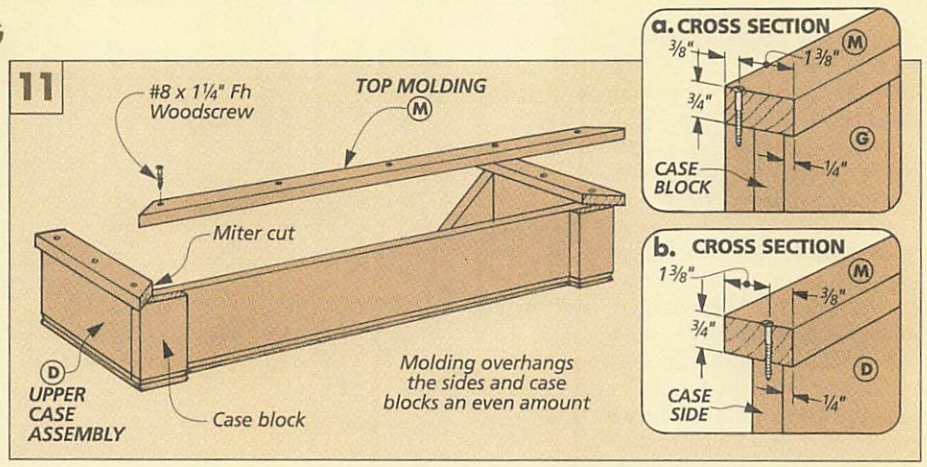

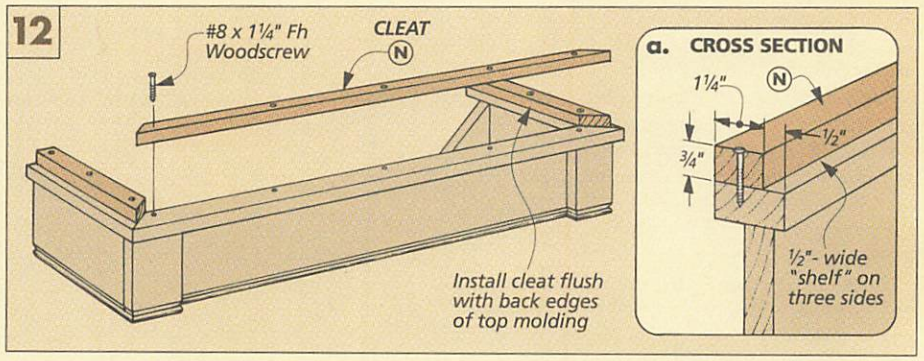

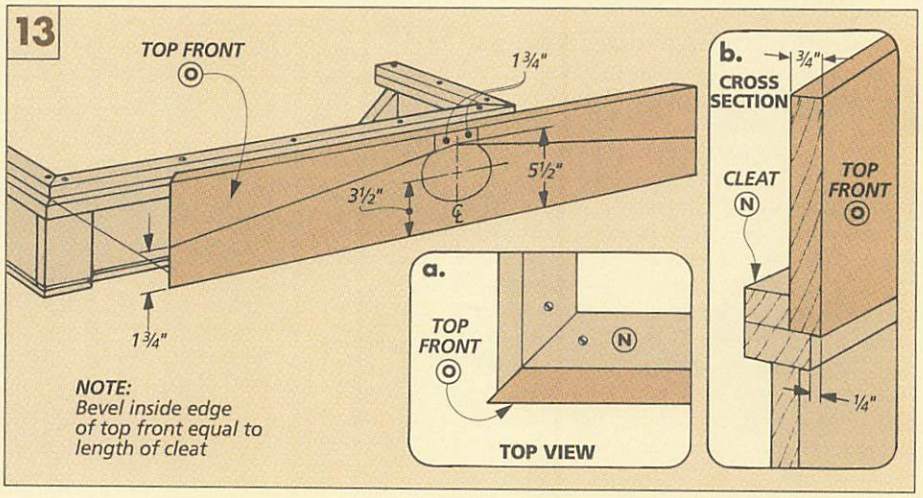

DRAWING AN OVAL

I haven't drawn an oval in quite awhile. So before starting, I brushed the cobwebs off my old geometry book to figure out how to make one.

As it turned out, it's not that hard to construct an oval. First, only four points need to be drawn. Then all you need to do is draw two circles and two arcs with a compass.

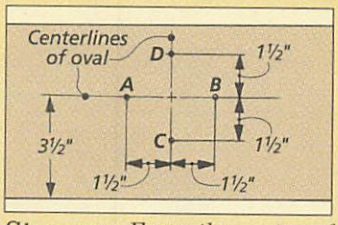

Step one: *From the center of the oval measure and mark the center points* ***a, b, c,*** *and* ***d.***

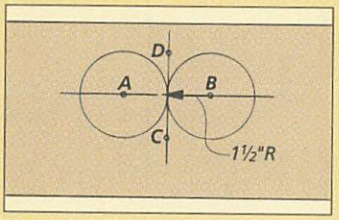

Step two: *Use center points* ***a*** *and* ***b*** *to draw two 3" circles to form the ends of the oval.*

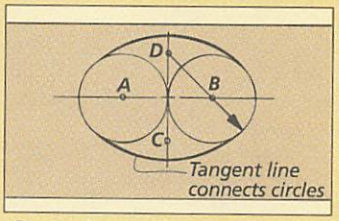

Step three: *Use center points* ***c*** *and* ***d*** *to draw arcs connecting the tangents of the circles.*

TOP SIDES. Once the top front was installed, I started work on the **top sides (P)**, see Fig. 14. The goal here is to make the sides flush with the tapered edge on the front piece, see Fig. 14a.

The simplest way too do that is by starting with a board that's wider than needed (In my case, 3"). Then rip a 10° bevel along one edge, see Fig. 14a. This bevel matches the angle of the taper cut on the top front.

Next, miter one end to match the miter on the top front, and cut the sides to length. The side pieces should end up flush with the ends of the side cleats.

Then sneak up on the final width by making several rip cuts on the side *opposite* the 10° bevel (My side pieces ended up 1¾" wide). After the sides fit flush, glue and clamp them to the cleats.

COVE MOLDING. The final piece of molding added to the top assembly is **cove molding (Q)**. It attaches to the top front and sides, see Fig. 15.

I started by cutting the molding to its finished width (1⅜"). And then routing a ½" cove, see Fig. 15a.

Next, I cut the front and side pieces to fit on the top front and sides. Position the front pieces of cove molding so they overhang both edges of the oval by the same amount, see Fig. 15b. (Mine were ⅛" past the edge.) Then glue and screw the front and side pieces of cove molding in place. Note: The back edge of the cove molding is installed flush with the inside face of the top front and sides, see Fig. 16.

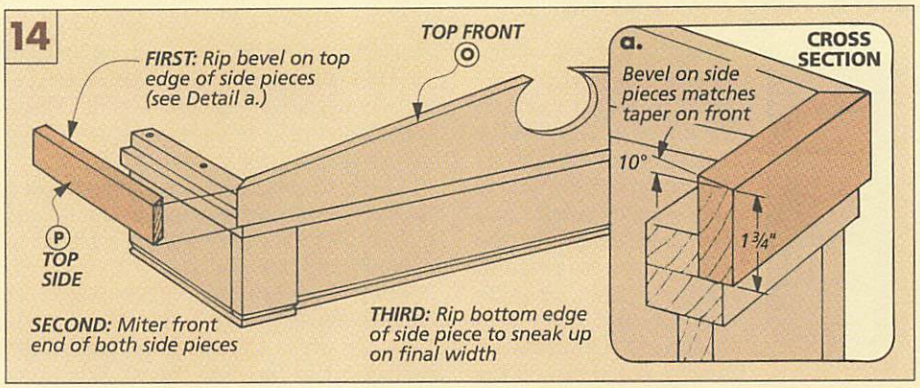

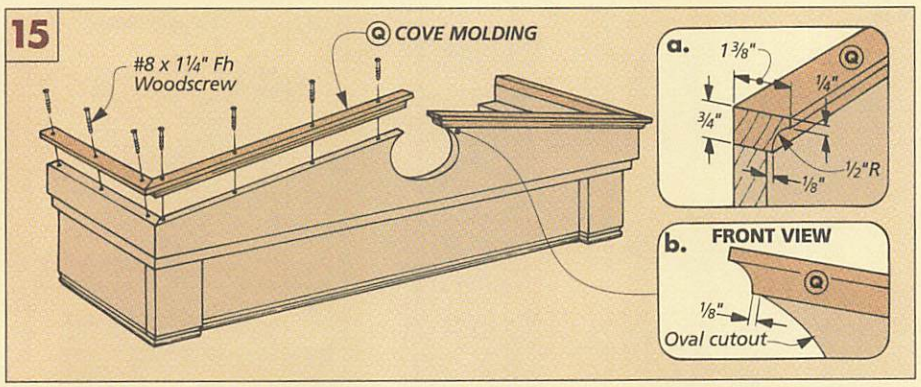

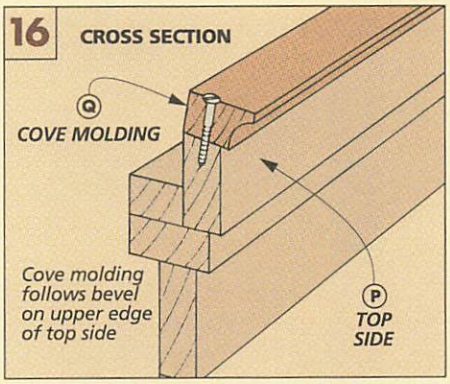

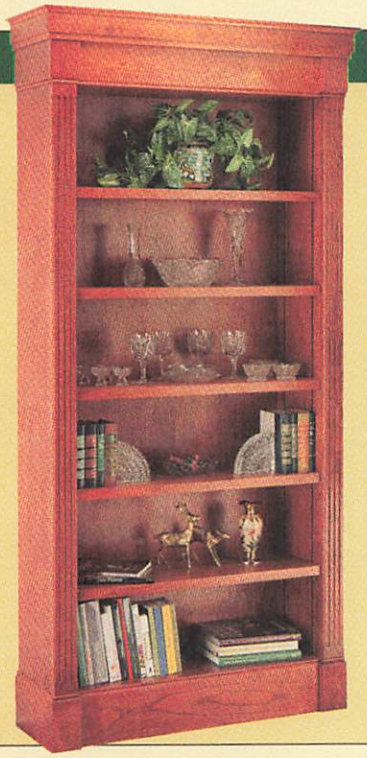

ALTERNATE TOP

This Bookcase is built with components. By changing one component the whole appearance of the bookcase can change. For a simpler approach we designed an alternate top assembly. This design does away with the tapered cuts and the oval. Straight pieces are used instead, see Drawing below.

Cut the top front and sides to length and glue and clamp them to the cleat. Then cut the cove molding to fit on top of the top front and sides. Position the cove molding so the back edge is flush with the inside face of the top front and sides. Then glue and screw the cove molding in place.

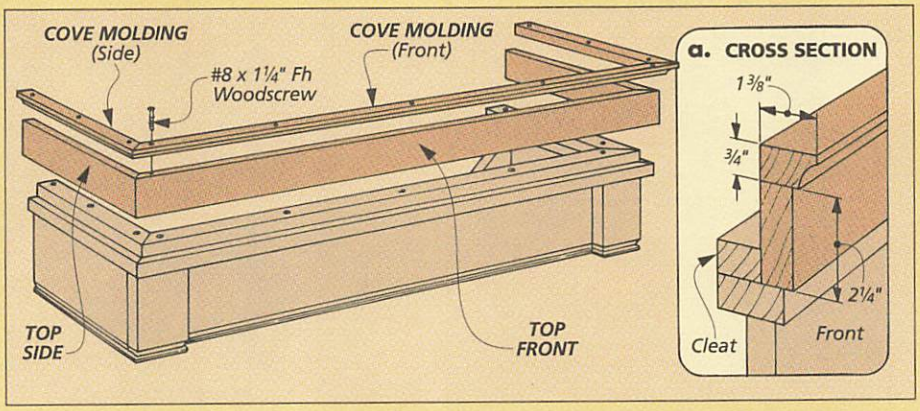

SIDE ASSEMBLIES

Once the top and bottom assemblies were completed I started work on the side assemblies. What makes them unique is they're built with double wall construction. And the space between the walls is for knockdown hardware. This hardware connects the sides with the top and bottom assemblies. A fluted cap on the front hides the hardware from view.

FLUTED CAP. I started work on the side assemblies by making the **fluted caps (R)**. They have evenly spaced flutes on the face and half flutes on each edge. To help space the flutes evenly, I used a fluting jig (see page 30 for more on the jig).

I used an oversized blank to make each cap. They were longer than needed so stop blocks could be clamped on the ends. These blocks stop the jig in the same spot to keep the flute lengths equal, see Fig. 17.

The blanks were also wider than needed (3¾"). That way the two outside flutes could be ripped in half when cutting the blanks to finished width, see Fig. 17a.

After the caps are cut to finished size, I cut two grooves on the back side of each cap. These grooves are sized to match the tongues cut in the side panels. When the case is ready to be assembled they help keep the cap aligned with the sides.

SIDES. After cutting the grooves in the cap, I started work on the sides. Both sides have an **interior panel (S)** and **exterior panel (T)** made from plywood, see Fig. 18. These panels are identical in length, but the interior panel is cut ¼" narrower. This allows for the thickness of the plywood back that's installed later.

After the panels were cut to finished length and width, I rabbeted the front edge of each panel to form a tongue. The tongues are cut so they'll fit snug in the grooves on the back of the fluted cap.

Next, four dadoes are cut on the inside walls of both the interior and exterior panels, see Fig. 18c. Plywood ribs fit in these dadoes to help keep the panels aligned.

Then two full length grooves are cut in the inside face on both interior panels, see Fig. 18b. These are for metal shelf standards which are added later.

RIBS. After the grooves are cut, I made four **ribs (U)** for each side assembly, see Fig. 18a. These ribs fit in the dadoes cut in the interior and exterior panels. Two of the

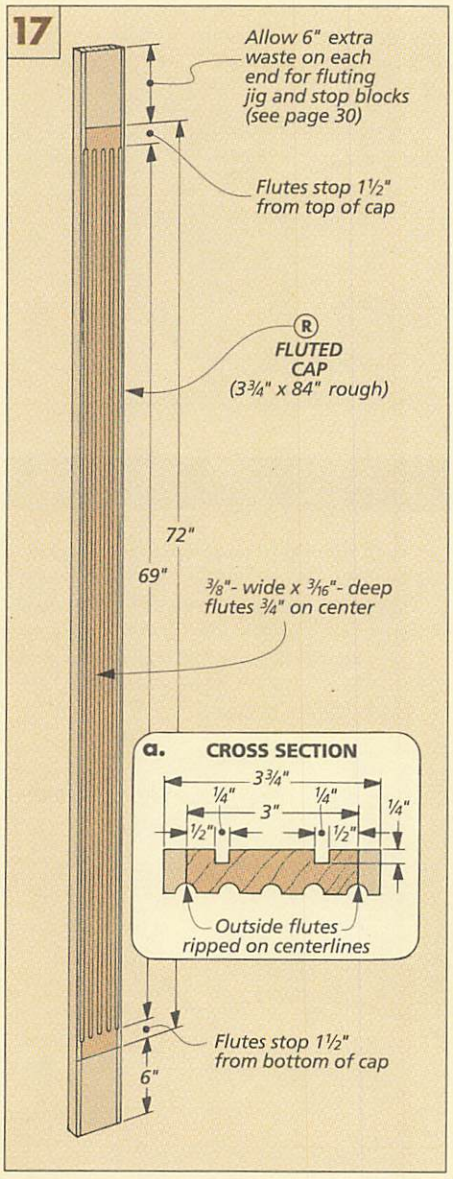

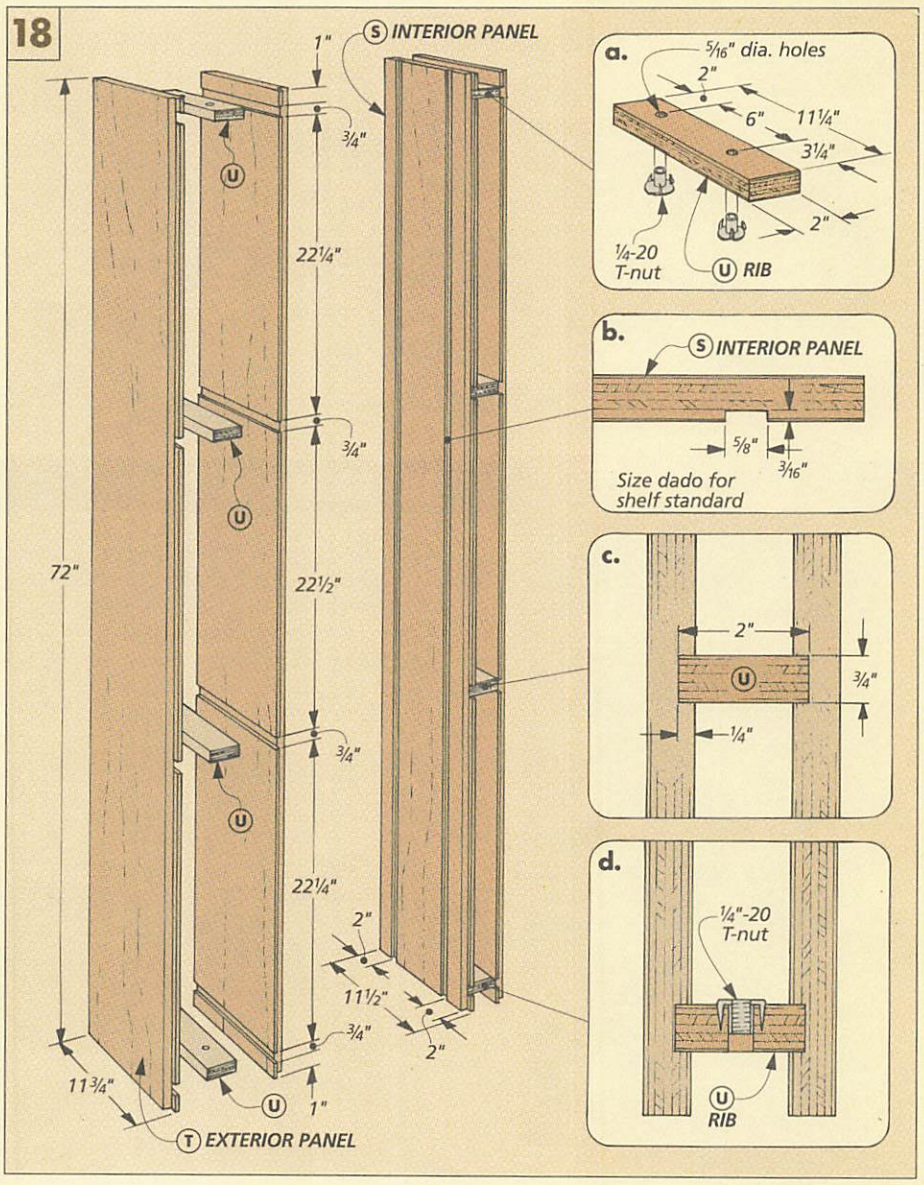

ribs are drilled to accept T-nuts. Bolts inserted through the top and bottom assemblies and into the T-nuts are used to draw everything together during final assembly.

SIDE ASSEMBLY. After the T-nuts are installed in the ribs the sides can be assembled. First glue and install the ribs in the dadoes, see Fig. 18. As you install them, remember to put the ribs with the T-nuts at the top and bottom locations.

Then glue and clamp the fluted caps on the front of both side assemblies.

ALIGNMENT BLOCKS. To help put the Bookcase back together if it's taken apart, **alignment blocks (V)** are added to the upper/lower case assemblies. They automatically align the sides and the cases.

First, the blocks are cut to fit into the top and bottom openings in the sides, see Fig. 19. Chamfer the edges to make it easier for the blocks to fit in the sides.

Next, glue and screw the blocks to the top/bottom panels, see Figs. 20 and 20a.

Then drill oversize holes through the blocks and top/bottom panels. The larger holes make it easier to get the bolts aligned with the T-nuts.

INSTALLATION. After the holes are drilled, I attached the sides to the upper and lower case with bolts and washers, see Fig. 21.

BACK. Now measure the opening for the **back (W)** and cut it to size, see Fig. 22. Then screw it in place. Note: The back doesn't fit flush with the back of the Bookcase. Instead, it butts up against the inside edge of both exterior panels.

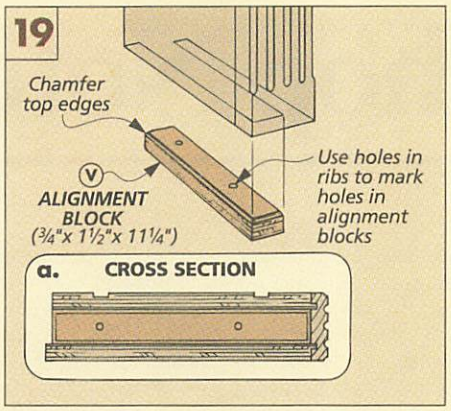

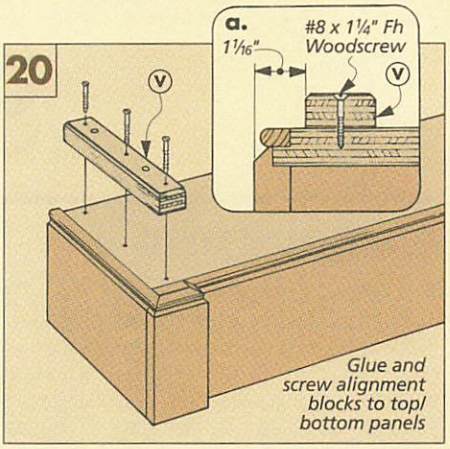

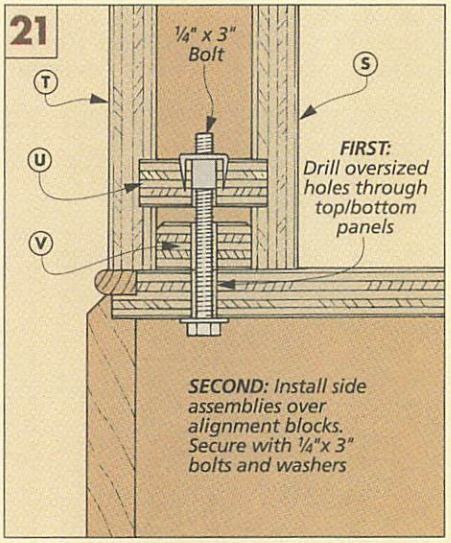

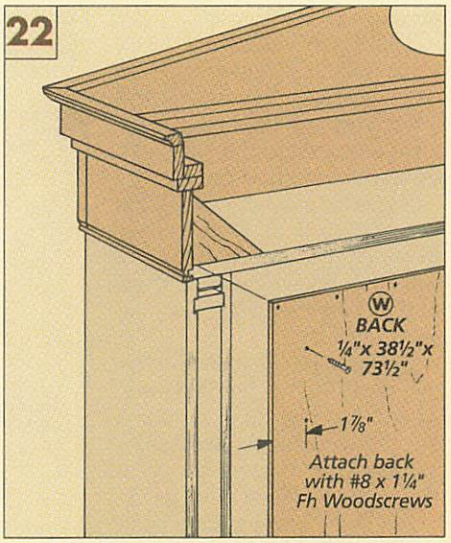

SHELVES

To support the shelves, I used metal shelf standards. They're installed in the grooves you cut earlier in the interior panels. (See page 31 for sources.)

One thing to keep in mind as you install the standards is check to make sure they're positioned in the same direction (the numbers stamped on the brackets are all right side up.) Then use the nails that came with the standards to hold them in place.

SHELVES. Now the **shelves (X)** can be cut to fit between the standards, see Fig. 23.

I added **trim pieces (Y)** to the front of each plywood shelf. They strengthen the shelves and hide the edges at the same time.

Glue and clamp the trim pieces in place. Adjust the position of the trim pieces so they fit flush with the top of the shelves. ❑

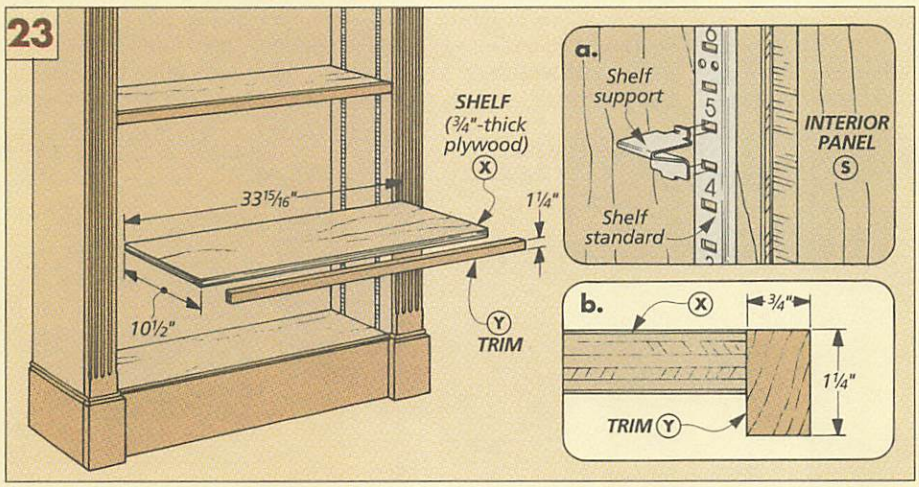

FINISH

When it came time to apply a finish to the Bookcase I decided to use a cherry stain. I wanted the rich reddish-brown color without waiting for the aging process. And using stain would even out the color differences between the lighter sapwood and darker heartwood.

I used a gel stain (see page 31 for sources). It doesn't penetrate into the wood as much as regular stains. That way the wavy grain found in cherry won't soak up the stain and leave dark blotches on the surface.

After the stain had dried, I applied three thin coats of gel varnish. Just wipe it on with a rag and buff it out before it gets tacky.

Shop Notes

BACKROUTING

■ Freehand routing is normally uneventful. Turn on the router, make a pass, then turn off the router. The result is usually a perfectly molded surface. But you can run into a problem when you try to run the router around a corner.

That's the situation I faced while building the Bookcase on page 6. Both the upper and lower case assemblies call for chamfers around the sides and front, refer to Fig. 8 on page 9.

If you try to rout these chamfers in the normal way (feeding the router from left to right), you will be approaching the corner of the front trim piece from *behind*, see Fig. 1.

As the router bit exits the corner, it will take a chunk of wood with it, see Fig. 1a. But chipout like this can easily be avoided by approaching the corner from the *front*, see Figs. 2 and 2a.

Freehand routing from right to left is called backrouting, and it's a good way to eliminate chipout on corners. But because it's not the normal direction of feed, it's something I usually try to avoid.

Safety Note: *Never* backrout (feed the workpiece from left to right) on the router table. In this situation the router bit can grab the workpiece from your hand and pull your hand into the bit.

FIRM GRIP. There are a couple things to keep in mind when backrouting across a workpiece. First, keep a firm grip on the router. In the normal feed direction, the router bit pulls itself smoothly along the workpiece as it's guided by the bearing.

But it's different when backrouting. Now the bit and bearing tend to "hop" along the edge. Taking little nibbles out of the wood, not continuous slices.

SHALLOW PASSES. The second tip for backrouting is to take light (shallow) passes. Again, the reason for this is control. By taking smaller nibbles, the router bit will do less hopping.

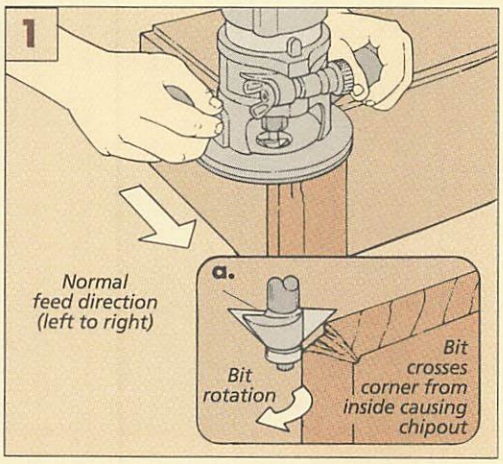

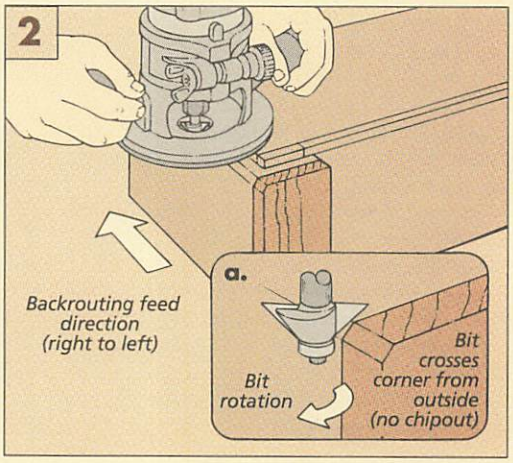

RELIEF CUTS

■ The success of a project depends on the fit of the parts. Tight fit, clean lines, neat appearance. This is especially true for a piece of trim that's applied to the face of a project. Such as the case blocks on the Bookcase in this issue.

On the Bookcase, the blocks are solid pieces of cherry. They're applied to the corners of the base and top cabinets, see second drawing in Fig. 1.

The blocks should fit tight to the case along their edges. But if the blocks are cupped even slightly the edges *won't* fit tight, see Fig. 1. The same is true if there's any irregularity (bump) across the joint line between the case front and side.

This is the same problem faced by carpenters who install trim molding in houses. Their solution is to use molding that's milled with a shallow "relief" on the back side so the molding pulls tight to a wall.

So I cut a shallow channel across the back side to create relief behind the block, see Fig. 2. Note: In order to avoid weakening the block, only cut the channel 1/16" deep, see Fig. 2a.

After cutting the channel, the block can be screwed to the case.

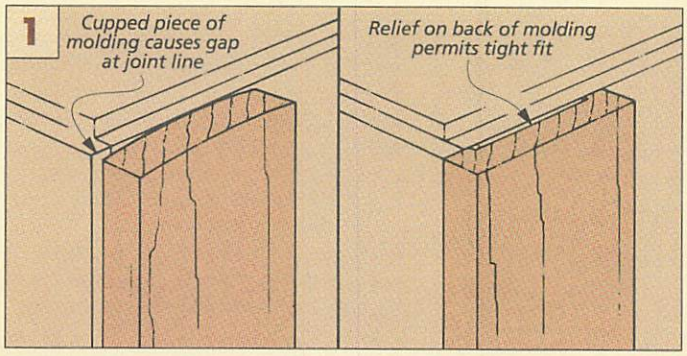

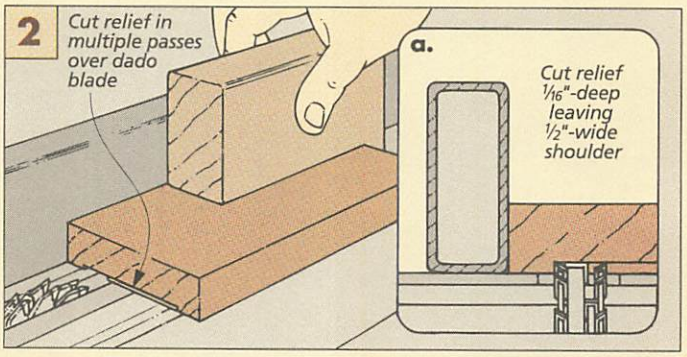

CUSTOM SCRAPER

▲ *A shop-made scraper quickly removes burn marks on the ends of flutes. The scraper is just a piece of hacksaw blade filed to shape.*

■ The secret to a clean router cut is to keep the router moving. But some projects call for a "stopped" router cut. The Bookcase shown on page 6 is one of those projects.

The caps on each side of the Bookcase have decorative flutes routed on the front. And the flutes are stopped 1½" from the ends, see photo. To stop the flutes, you have to stop the router.

The only problem is, when the router stops moving, the router bit doesn't. It keeps on spinning and burns the wood at the end of the flute.

Ordinarily, I'll get rid of a burn mark with a sanding block or a cabinet scraper. But a stopped flute has a rounded end — not the same shape as any of my blocks or scrapers.

So I made a custom scraper for the stopped flutes, see photo. It starts out as the cut-off end of a hacksaw blade, see Fig. 1.

Then I ground the end of the blade to match the shape of the flute, see Fig. 2. Finally, I used a file to put a slight bevel around the rounded profile, see Fig. 2a. (This produces a sharper edge.)

Now the scraper can be used to quickly clean out the ends of the flutes. Just be careful not to deepen the flutes — light scraping is all that's needed.

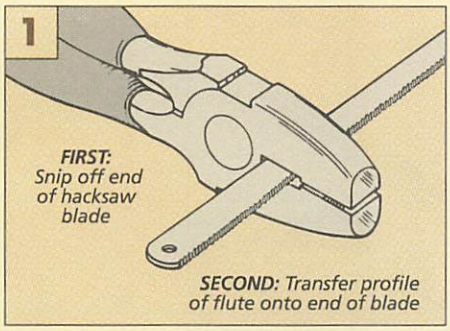

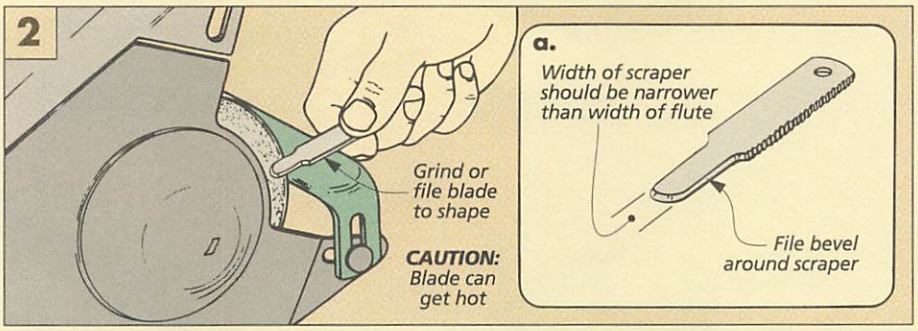

FLATTENING A BUTCHER BLOCK

■ The Cutting Board on page 16 went together well, and it wasn't a lot of work to get the board flat and smooth. I got by with just a belt sander to flatten the top, see Fig. 7, page 21.

But I knew there had to be a way to make the flattening step easier and faster. (Thinking this project would be good for someone making Christmas gifts.)

So I did some quick research. How would a real meat cutter flatten a beat-up butcher block? The butcher in my neighborhood told me he used to have a special saw that actually cut a thin section off the top.

Obviously this method was out of the question for the Cutting Board. The method I came up with is similar to the butcher's. But instead of a saw, it involves a simple setup and just a router with a straight bit, see drawing at right.

SLED. The key to the technique is a wide, stiff replacement base for the router (I used ¾" plywood), see drawing. The base should be wide enough to straddle the workpiece and stiff enough so it won't bow.

RUNNERS. The other part of this setup is a pair of runners for the router to ride on. The most important thing about the runners is their thickness — they should be at least 1/16" *thicker* than the project. This allows the base plate to clear the Cutting Board as the router bit flattens the top, see detail in drawing.

Note: Secure the workpiece to the work surface. And also secure the runners on either side of the board, see drawing.

To flatten the workpiece, simply guide the router across the board in back-and-forth motions until all the high spots have been leveled out.

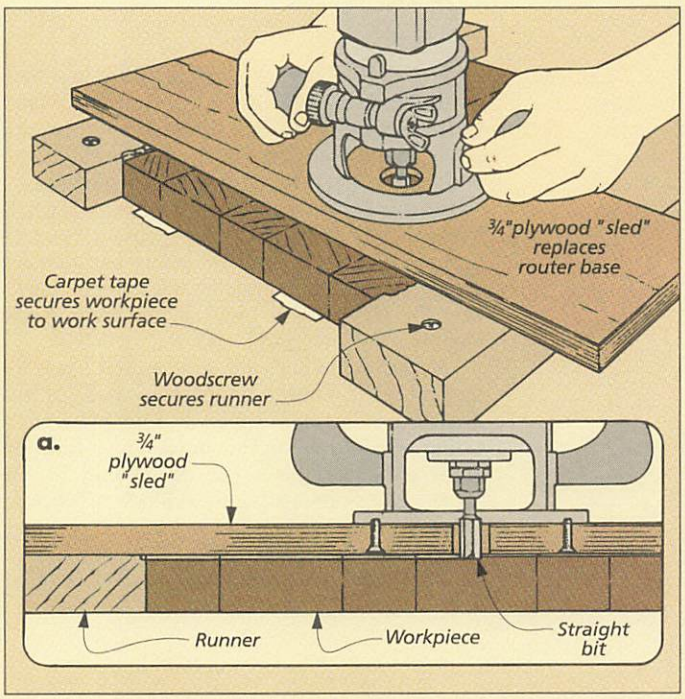

Cutting Board

A project with all the advantages of a "true" butcher block. And some practical solutions to working with end grain.

A bunch of blocks glued together in a slab. That's about all there is to a cutting board. But when the blocks are oriented with the *end* grain of the wood as the cutting surface, the project is a "true" butcher block cutting board.

There's a good reason a true butcher block is made with the end grain facing up — it's extra durable. End grain resists denting and scratching better than face grain or edge grain. That's why the old butcher block in the back of the meat market lasted so long.

But durability isn't the only reason I had for designing the Cutting Board this way. I was just as interested in appearance. For the most interesting effect, the board is made up with different-size blocks. With the orientation of the growth rings alternating from block to block.

Okay, a cutting board, even a butcher block cutting board, can be built fairly quickly. (It shouldn't take more than a weekend.) But building a cutting board with small blocks of end grain does present some challenges.

SMALL BLOCKS. First of all, what's the best way to cut and assemble a lot of small blocks? The answer is to cut the blocks from a blank made up of separate strips. It's less messy and a lot more efficient.

FLAT & SMOOTH. The second challenge has to do with the end grain. Because it's so durable, end grain can be difficult to get smooth and flat. Here, the solution takes a little more effort.

You might think of using a jointer to flatten the surface and a thickness planer to smooth it out. But not for this Cutting Board — it's too wide for most home shop jointers or planers.

The best tool is a belt sander instead of a jointer. And a finish sander in place of the planer. Note: There are more tips for building a butcher block cutting board in a separate article that begins on page 20.

THE BLOCK

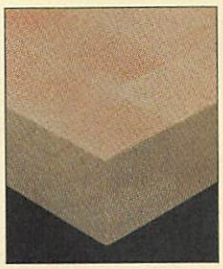

There are two main parts to this Cutting Board — the board itself and the feet it rests on. But to get the butcher block effect without using a lot of small blocks, the board is made from "butcher block strips."

BLANKS. I started by gluing up pieces of 1¾"-thick stock into two different-size blanks, see Fig. 1. Note: I used hard maple and water-resistant glue (Titebond II).

One of the blanks has three pieces and the other has four, see Fig. 1. But the pieces aren't all the same width. The main reason is looks — I wanted the Board to look like it was made up of a random series of blocks.

By staggering the joint lines between adjacent blocks, then following a certain assembly sequence, there is always at least ½" between adjacent joint lines.

Note: There are a lot of glue joints in this project. And they must all fit perfectly. So start with pieces that have square corners and smooth, flat edges. (For more on this, see pages 20 and 21.)

There's another detail that adds to the random look. I made sure to alternate the direction of the growth rings on the ends of the pieces, see Figs. 1 and 1a.

STRIPS. After the two blanks have been glued up, they can be planed to final thickness (1½"). Then, strips can be cut from the blanks, see Fig. 2. Note: The blanks are extra-long so the seven strips needed can be safely cut from each. Each strip must be exactly the same length (1½"). So I used a stop block clamped to the rip fence, see Fig. 2a.

ASSEMBLY. After all the strips have been cut from the blanks, turn each so the end grain faces up. Then mark one end of each strip to act as a reference during assembly.

Now, arrange the strips with the marks oriented as shown in Fig. 3. Note: Each row consists of two strips — a narrow one (three blocks) and a wider one (four blocks). When all the strips fit together well, they can be glued together one row at a time, see Fig. 4. Note: For tips on this, see page 20.

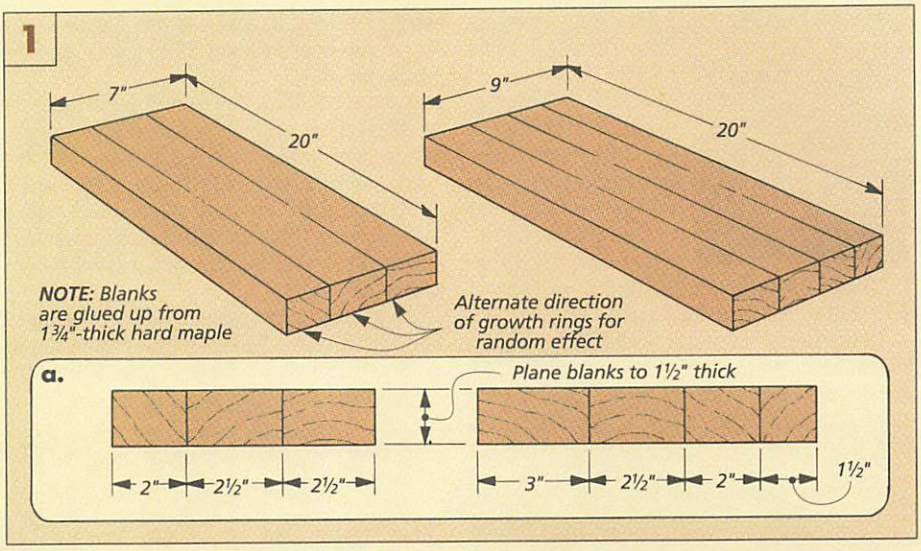

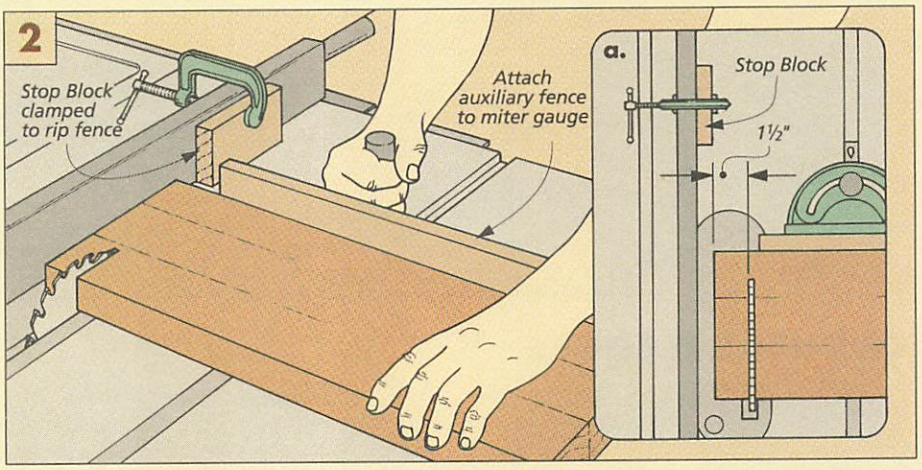

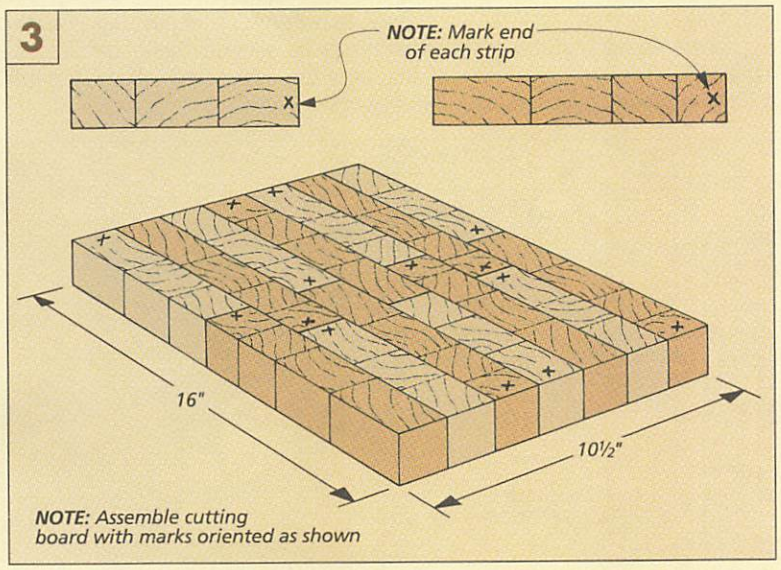

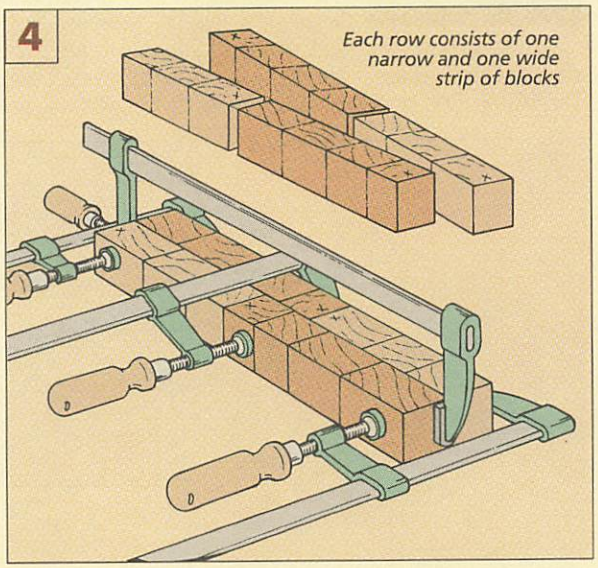

JUICE GROOVE

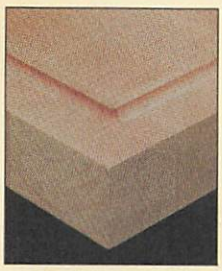

After the Cutting Board was completely glued up, I sanded it thoroughly to flatten and smooth the surface. (For more information on how to do this, refer to the article beginning on page 20.)

Then I moved on to the details of the project that make it easier to use.

In my house a cutting board like this gets used for cutting a lot of messy foods, like fresh tomatoes and hot roast beef. That's why I decided to add a groove around the top of the board for catching juices, see the photo at left.

TEMPLATE. The key to routing the groove is consistency. For the neatest appearance, the groove is inset the same distance (¾") from all four edges of the board, see Fig. 6a.

And because the groove is routed with a core box bit, there needs to be a template to guide the router bit. (A core box bit has no guide bearing.)

So I made a template from ¼" Masonite, see Fig. 5. Also, there's a guide bushing installed in the router base to ride against the edge of the template, see Fig. 6a.

Note: Cut the template to size to account for the width of the rim, the diameter of the router bit, and also the diameter of the guide bushing, see Fig. 6a. (In my case, the template is 2⅝" *smaller* in both dimensions than the Cutting Board, see Fig. 5.)

ROUTING GROOVE. After attaching the template to the center of the board, adjust the router bit to the desired cutting depth, see Fig. 6a. Then, the groove is routed in a counter-clockwise direction, see Fig. 6.

Note: If you're not using a plunge-type router, begin the cut by carefully tipping the router into the workpiece while keeping the bushing tight against the template.

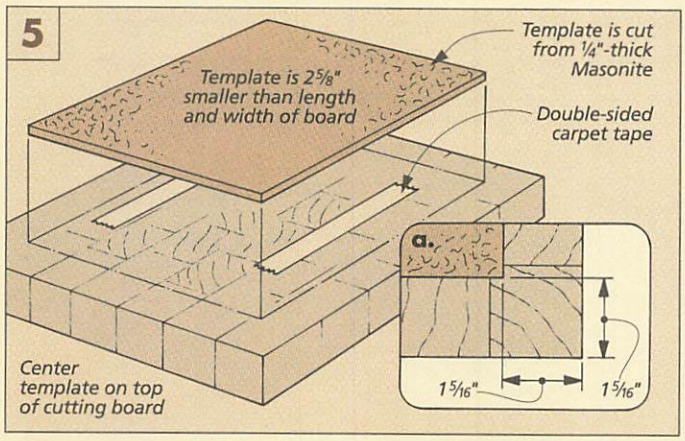

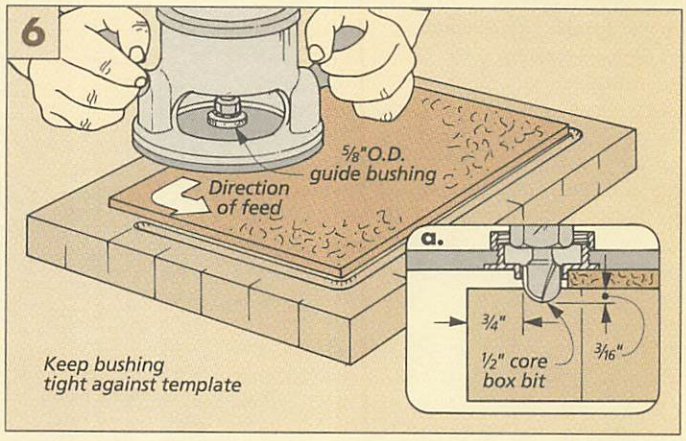

CORNERS & EDGES

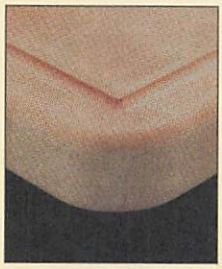

After routing the juice groove in the top of the board, I moved on to the corners and edges.

The idea is to give the board a more finished appearance. And also make it a little easier to handle.

RADIUS CORNERS. The first thing to do is round off the square corners of the board. Do this by first drawing an arc on each of the corners using a compass, see Fig. 7.

Design Note: For this Cutting Board I wanted to leave a consistent ¾"-wide rim around the board just outside the "juice groove." This meant the radius of the arc should be 1 5/16".

To draw the arc, first adjust the compass to form the desired radius, see Fig. 7a. Then draw an arc around each corner of the board, see Fig. 7.

After drawing an arc on each of the corners, I shaped the radius in two steps. First, cut just outside the mark using the bandsaw. Then I sanded the arc smooth using the disc sander. (A belt sander or drum sander would also work, but may be a little trickier to get the coners perfect.)

ROUND OVER EDGES. The next thing to do to make the board more finished looking is to round over all the sharp edges. To do this I again used a hand-held router, only this time with a ⅜" round-over bit, see Fig. 8.

Note: In order to avoid burning, rout the roundovers in several light passes. And round over the edges on both the top *and* bottom of the board, see Fig. 8a.

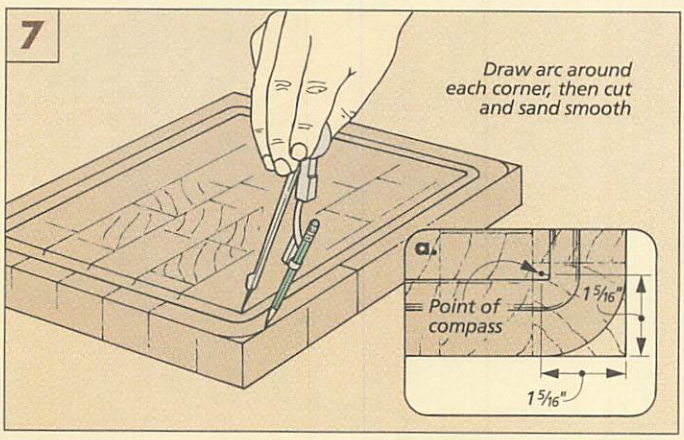

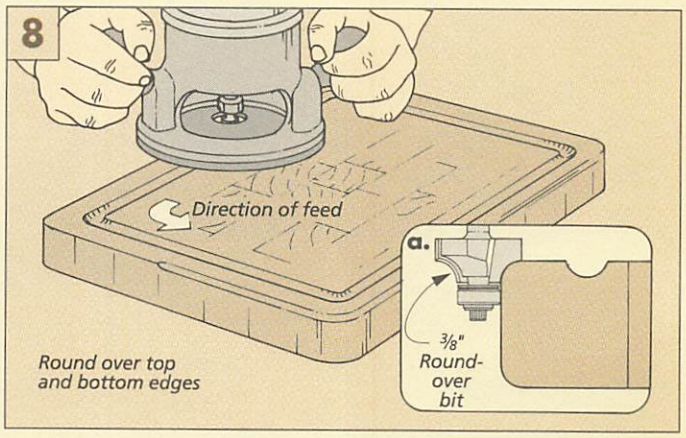

THE FEET

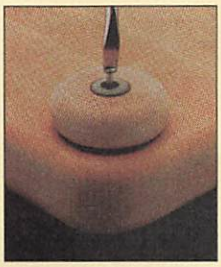

When the corners and edges of the board have been rounded, the board could be put to use. But I thought it would look more interesting with some feet on the bottom.

Looks isn't the only reason for adding the feet — they serve a useful purpose, too. They elevate the board off the surface of a countertop so it's easier to pick up.

Design Note: The feet are nothing more than wooden wheels used for toys. And we experimented with several different sizes before deciding that 2¼"-diameter maple wheels look best.

ENLARGE HUB. The feet work well for elevating the Cutting Board. But they also make it more likely the board will slide around while you're using it. So, to give the feet a little more "grab," I added a rubber bumper to each of the wheels, see photo at left.

To secure the bumpers in the wheels, the axle hole in the wheel needs to be enlarged. This can be done by drilling a shallow counterbore on the back (flat) side of the wheel. But drilling a counterbore in an existing hole is almost impossible.

There's a simple solution to take the guesswork out of drilling the counterbore in the right place. It involves securing the wheel on the drill press so the center of the wheel lines up directly under the center of the drill bit.

This is done using a short length of dowel that fits in both the axle hole of the wheel and a piece of scrap secured to the drill press table, see Fig. 9.

Note: The drill bit for the dowel must match the diameter of the axle hole, and the drill bit for the counterbore must match the diameter of the rubber bumper.

Finally, a clamp attached to the wheel keeps the wheel from spinning while the counterbore is being drilled, see Fig. 10.

ATTACH WHEEL. After the counterbores have been drilled in the wheels, the rubber bumpers can be inserted. Then I applied finish to both sides of the board (and also to the wheels), see box below.

Finally, the feet can be screwed to the bottom of the Cutting Board, see Fig. 11.

For sources of wooden wheels and rubber bumpers refer to page 31. ❑

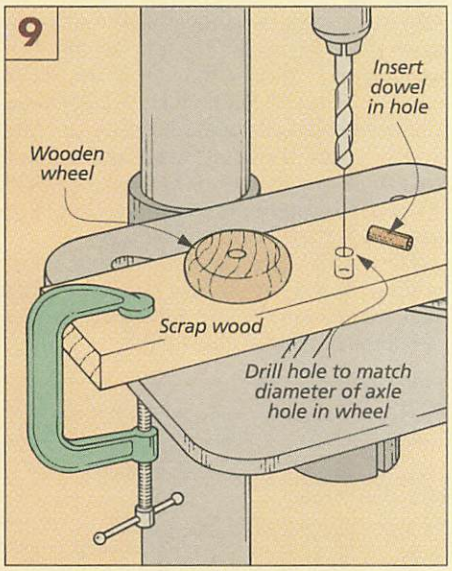

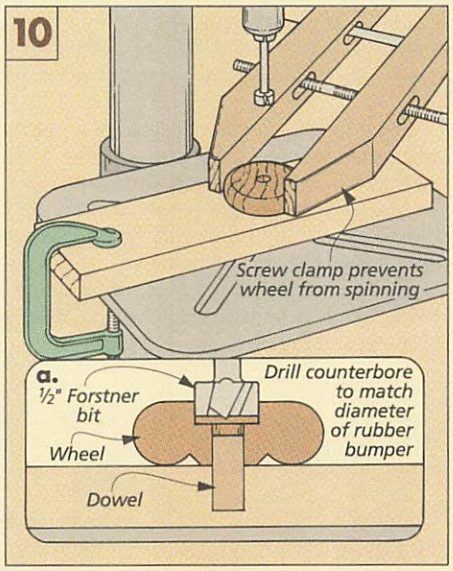

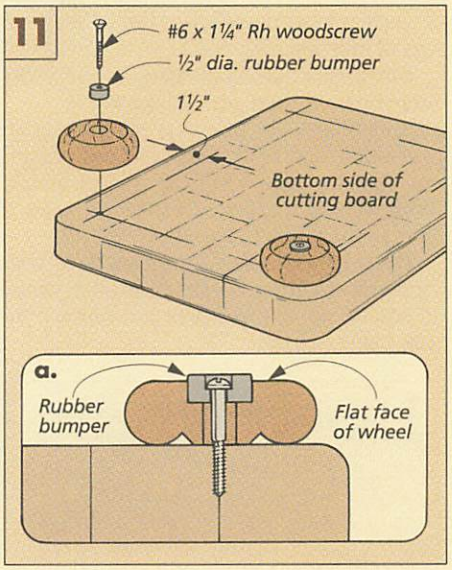

CUTTING BOARD: CUSTOM FINISH

There are several products available for finishing a cutting board (see page 31 for some names and sources). But for this project I decided to try making my own.

I wanted two things from the finish. First, the penetration of an oil. And I also wanted the shine of a wax. So I mixed up a batch of oil-wax finish. (I used mineral oil because it's safe for consumption.)

It's not a complicated formula, and it's not a scientific process. Roughly ten parts mineral oil to one part paraffin wax. That's it. The way I mixed it was to fill a small coffee cup about half full with the mineral oil, see photo. Then scrape shavings into the cup from a block of paraffin wax. (Just like carving a bar of soap.)

To dissolve the wax shavings I simply placed the cup in the warmest place I could think of — the sunny dashboard of my vehicle. A pan of hot water would do the same thing. Just stay away from open flames — paraffin is a petroleum distillate and potentially flammable.

After about fifteen minutes the wax had dissolved and the finish was ready to be applied. Since the Cutting Board had already been sanded smooth (up to 220 grit), I immediately wiped on a coat of the oil-wax.

The next day the board was ready to be used, but first I shined it with a soft cloth.

Ordinarily, I would apply several coats of finish to a project like this. But for a cutting board additional coats provide no additional protection. But, I do anticipate re-coating the board periodically after it's in use.

Oil-Wax Finish. *A safe finish for a cutting board is simple to make. Just mineral oil and paraffin wax from the supermarket.*

Assembly Tips

The Cutting Board on page 16 is built like a real butcher's block. It's just a smaller version. The important thing is to end up with a board that's perfectly flat and smooth. So I pay extra attention when the parts are being cut and glued together.

▲ *A butcher block cutting board starts out with multiple strips of wood, rather than dozens of smaller blocks. Then the strips are assembled in a sequence that produces a flat, smooth cutting surface.*

PREPARING THE STOCK

A butcher block starts out like any cutting board, with several strips glued together to form a blank. (Strips of multiple blocks are easier to work with than dozens of individual blocks.)

But a butcher block goes a step further than an ordinary cutting board. The blanks are then cut apart and glued together with the end grain facing *up*, refer to page 17 of the project article. What's most important in this process is that all the strips fit together well.

TIGHT JOINTS. After the strips have been ripped to rough width, I used an edge jointer to square up all the edges and remove the saw blade marks.

The goal is to get the strips to fit together with no gaps between them, see Fig. 1. To do this, it helps to have extra strips on hand. So you can shuffle the pieces around, turn them over, or flip them end for end. Whatever it takes to get the best fit.

Light clamping pressure across the strips helps show how the strips will fit during glue-up, see Fig. 2.

Shop Note: Bar clamps don't automatically distribute even pressure across a joint line. There's a tendency for the strips to "roll", see Fig. 2. So when clamping, be sure to position the bar of each clamp as flat as possible, see Figs. 2 and 3.

If there are any gaps at this point, I would replace any strip that's twisted or bowed before applying any glue.

FLAT TOP. Besides fitting perfectly from edge to edge, it's also important that the strips lay flat across the top, see Fig. 1.

Wait a minute, if the strips aren't flat now, can't I just plane the whole blank flat after it's glued up? Yes, you *will* plane the blank later. But I've found that some warped pieces have a "memory." Even if the strips don't move now, there's no guarantee they'll hold still later on.

Here again, dry clamp the strips before adding any glue. It shouldn't take more than light clamping pressure across the ends to see if the strips will glue up flat.

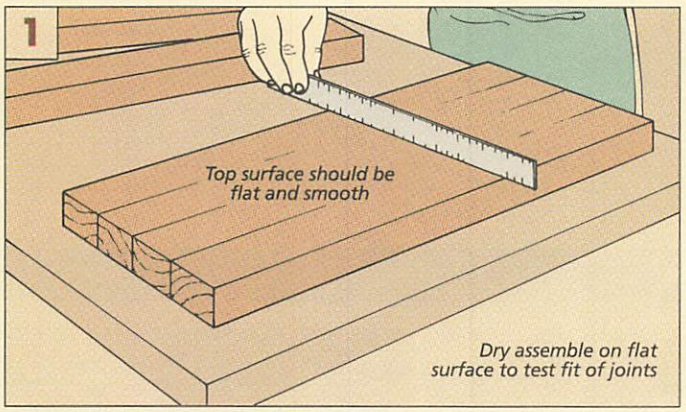

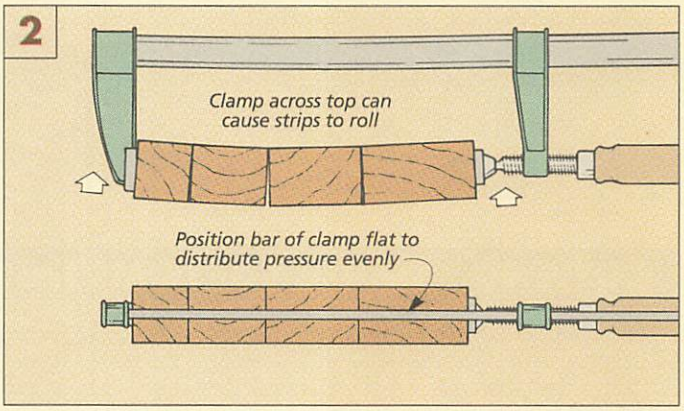

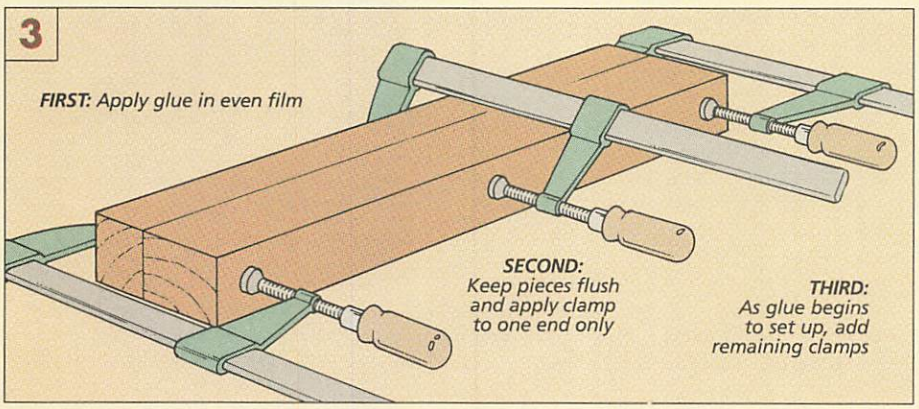

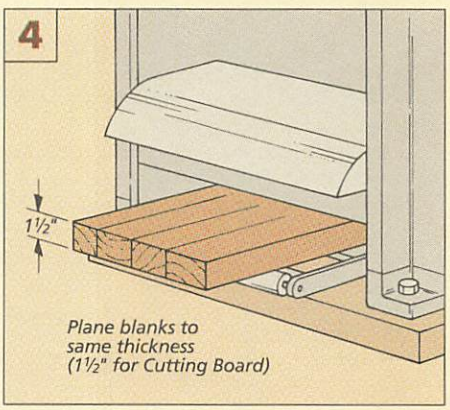

GLUING & CLAMPING

Because a butcher block starts out with many strips of wood, it can be a slippery mess when it's being glued up. But it's easy to keep things under control. One thing that helps is to work with only one joint at a time, see Fig. 3. And don't overdo it on the glue.

First, apply a narrow bead of water resistant glue to one of the strips (I used Franklin Titebond II). Then spread the bead into a thin, continuous film.

STRIP BY STRIP. Now, to keep the strips from slipping around under the pressure of the clamps, begin clamping at just *one* end, see Fig. 3. After the glue has begun to set up (it doesn't take long), the remaining clamps can be applied.

PLANE SMOOTH. Even if you've been careful gluing and clamping there can still be some "bumps" across the joint lines. So to eliminate the bumps, I next planed the blanks flat on both sides, see Fig. 4.

Design Note: The blanks for the Cutting Board are narrow enough to be run through a portable thickness planer.

CUT APART AND RE-GLUE. Now the glued-up blanks are cut apart and reassembled to get the butcher block effect. (For more on this, refer to Fig. 2 on page 17.)

After the blanks have been cut into strips, the strips are rolled so the end grain faces up, see Fig. 5. Then the strips are glued together to form the cutting board.

This is a bit different than gluing up the two blanks. First, two strips are glued together end to end. And clamped across the ends to keep the joint tight.

Then, a second row of strips is added to the first, see Fig. 5. Here again, let the glue begin to grab before putting on all the clamps.

Shop Note: No matter how careful you are, it's almost impossible to avoid little "steps" and glue squeeze-out between the two strips in a row, see Fig. 6a.

To get rid of the steps and keep everything smooth during assembly, make a light skim cut along the edge after each new row has been glued in place, see Fig. 6.

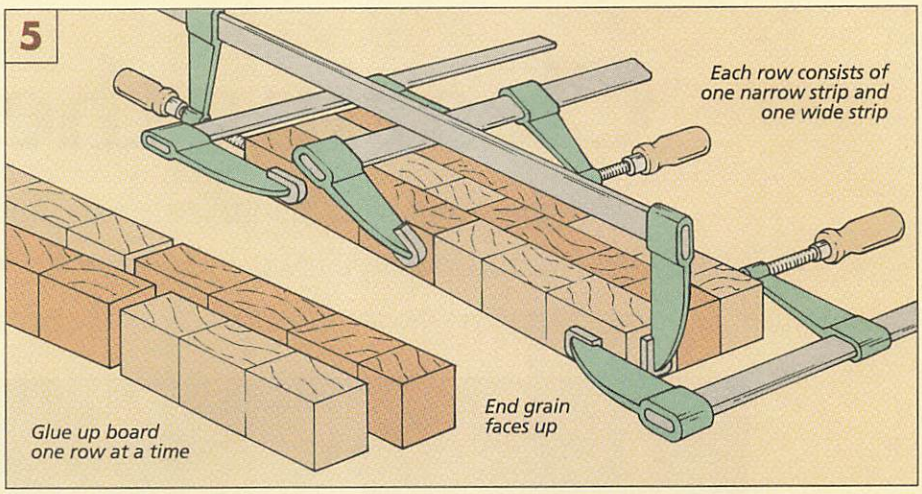

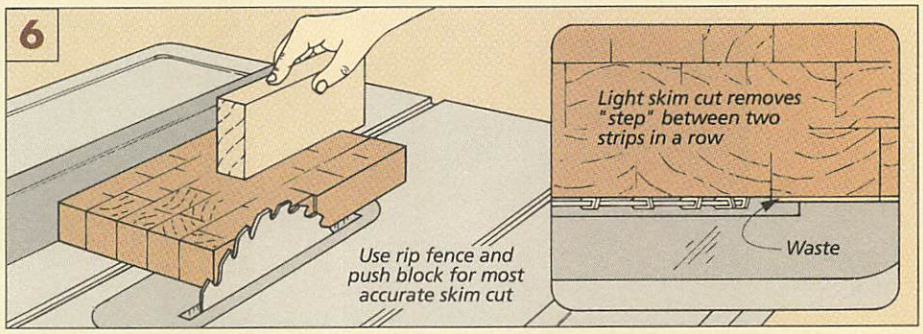

FLATTENING & SMOOTHING

Back when butchers actually used butcher blocks, an expert would sometimes come around to re-flatten the block. To do this, a special saw and system of guides was used. But I don't have any special tools for flattening a cutting board. Just ordinary shop tools. (For another method of flattening a cutting board, see the article on page 15.)

FLATTENING. The object of the sanding at this point is to first flatten the block. The easiest way to do this is to use a belt sander. Start with a coarse grit (I use 80-grit) and sand across the block, moving from end to end, see Fig. 7. Then sand at a right angle to the first direction.

Note: It may seem unnatural to sand across a board in two different directions. But don't worry — since the blocks are end grain the sanding direction doesn't matter.

SMOOTHING. After the board has been flattened, the next step is to smooth it. Actually, you first want to remove the 80-grit scratches left by the belt sander. On end grain this works best with the belt sander. But use a finer grit (120) paper this time, and sand in just one direction.

Now switch to a finish sander or sanding block. Start with 120-grit, then move up to 220. Finally, I used a large plywood sanding block to sand the entire board, see Fig. 8.

Then I finished the block with a non-toxic finish, see the box on page 19.

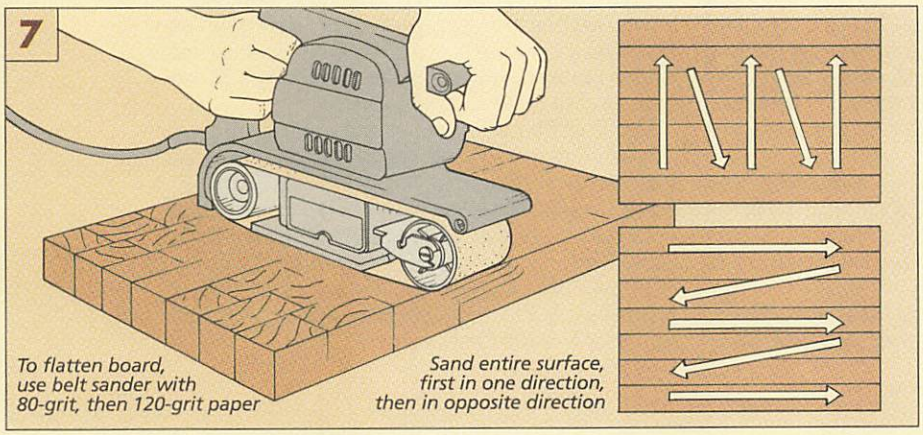

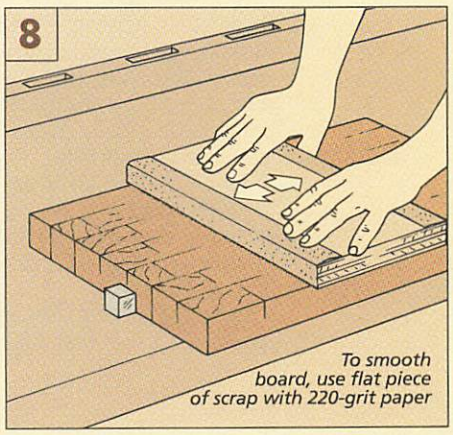

Clearing the Air

Whether ripping at the table saw or finish sanding, airborne dust is a nuisance every woodworker has to deal with. Here are two inexpensive solutions to clear the air in your shop.

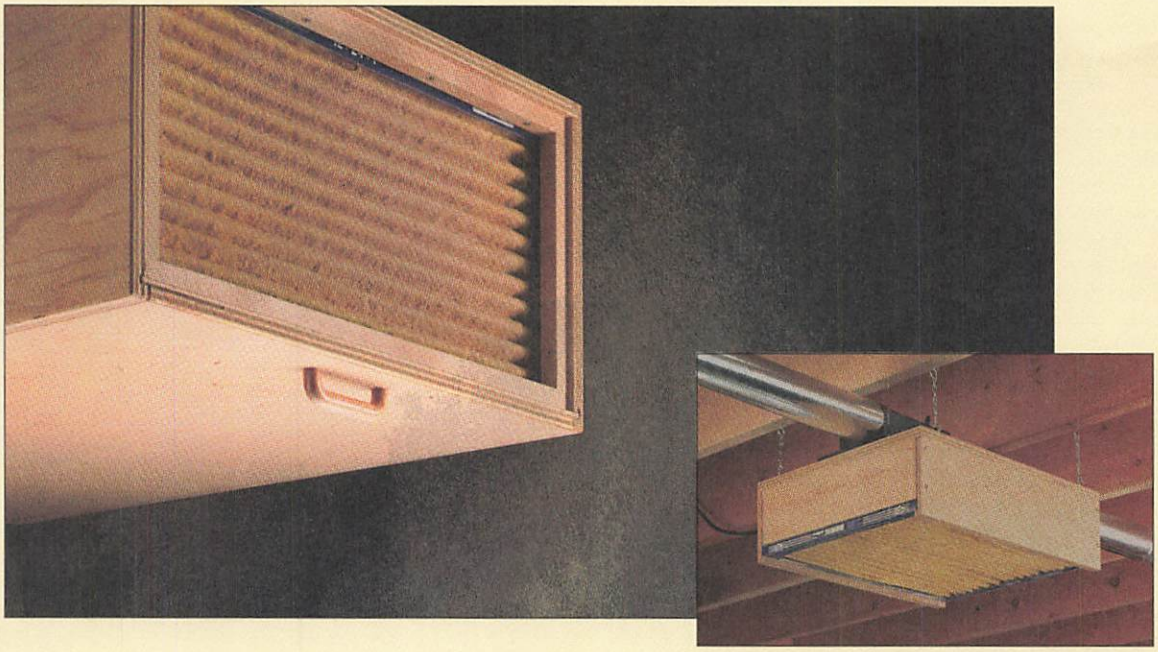

It doesn't take much sawing or sanding to kick up a lot of dust. And a shop full of airborne dust is not a good place to work.

DUST PROBLEMS. When inhaled, sawdust makes working in the shop uncomfortable. It will irritate the eyes, throat, and sinuses. And prolonged exposure has been found to cause even more serious health problems.

Then there's finishing. Most woodworkers don't have a separate finishing room sealed off from the rest of their shop. So when the sanding begins, a thick cloud of dust develops, like a rain cloud threatening to spoil a picnic. Except with sanding dust, what gets spoiled is a fresh coat of finish. The dust may not be noticeable as the finish first goes on, but rub a hand over it after it's dry. The dust stands out like braille.

And the dust problems don't stop when you leave the shop — especially if it's in the basement. Airborne dust tends to "migrate" throughout the house, spreading a fine layer over all the furniture and countertops.

DUST COLLECTOR. Of course, you may already have a dust collector. But a dust collector is designed for chips and large sawdust. It won't pick up the small, airborne dust that many stationary tools and hand sanders produce. But even if the dust does get sucked into the collector, the weave of the bag is too coarse to trap it. The dust will slip through the bag and back into the air.

AIR FILTER. There is a way to get rid of airborne dust. Professional shops often have a separate filter unit that will remove dust from the air. Unfortunately, these units aren't cheap.

Many commercial air filters are just open ended boxes that house a blower and some expensive bag filters. So we decided to take this basic concept and design our own air filter for the shop. One that was both easy to build and inexpensive.

Our first filter unit worked great, and it will clean a large shop quickly, see next page. But it may actually be more than what you need for a small shop. So we decided to build a second filter unit that was even less expensive, see page 26. This filter is designed for a smaller area (and a smaller budget).

Either filter unit can be built in a weekend. There are no messy filter bags. No complicated hook-ups. And a lot less dust in the air.

Heavy-Duty Shop Filter

This shop-made filter unit can be built in a weekend. Best of all, it will remove the airborne dust in your shop quietly and efficiently.

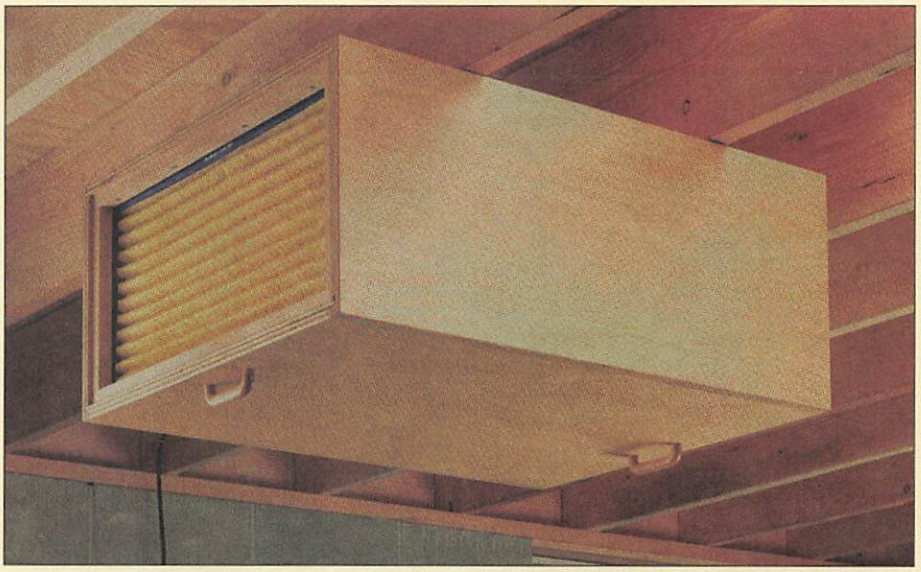

This Heavy-Duty Shop Filter is designed to use three furnace filters to clean the air. It doesn't rely on just one. There are two prefilters at the intake end of the unit and one at the exhaust end.

So by the time the air passes through the last filter, there's not much dust left to trap. The results are dusty furnace filters and cleaner air.

To make the unit even more efficient, I used pleated furnace filters instead of the fiberglass mesh type, see the box on page 24. These filters are commonly available and only cost a couple dollars more.

BLOWER. To circulate the air through the shop, I used a squirrel cage blower with an enclosed motor. This blower is easily the most expensive part of this project (about $115). But it's a workhorse. It'll circulate the air in a 250 sq. ft. shop in about 5 minutes.

CASE. The woodworking part of this project is easy. The filters and the blower are housed in a simple, open-ended case.

Changing the filters is easy too. To get at the filters, the bottom of the case isn't permanently attached. It slides open in either direction, and the filters simply drop down.

MATERIALS. This Shop Filter doesn't require a lot of materials. (For a list of supplies, see page 31.) For the wood, I used three board feet of hardwood and a little over half a sheet of ¾"-thick plywood. (I used birch, but any type plywood will work.)

EXPLODED VIEW

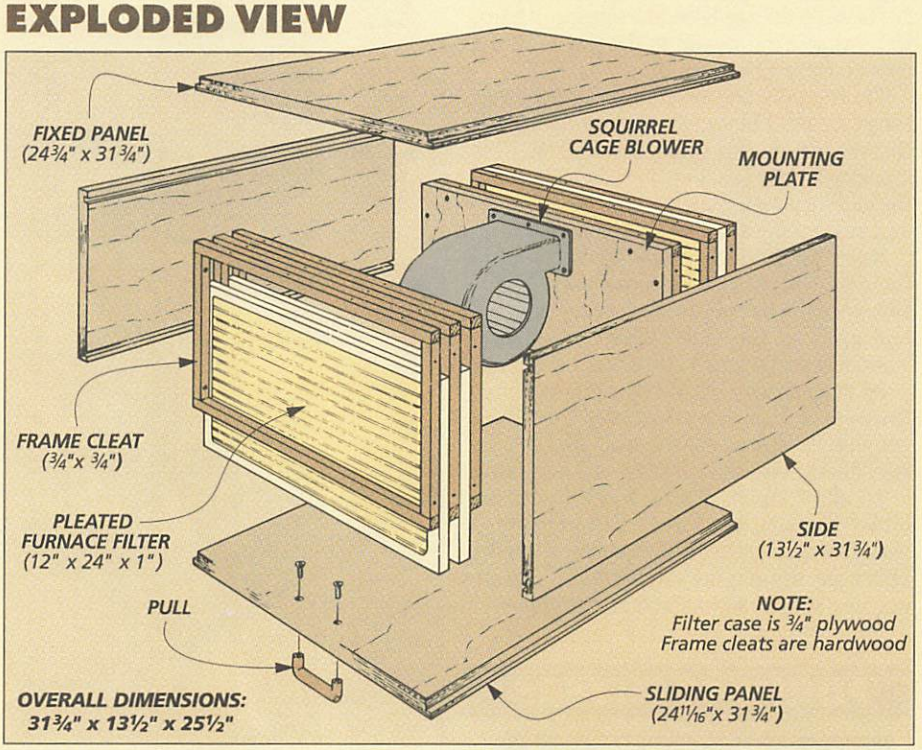

BUILDING THE FILTER CASE

To build the Shop Filter, I started with the case. The case is made up of four pieces: a fixed panel, a sliding panel, and two sides, see Exploded View. The size of the case really depends on the size furnace filters you use. I used 12" x 24" pleated furnace filters.

But I found that furnace filters aren't exactly 12" x 24". They're a little smaller. (And each brand is slightly different.) So before cutting the case parts to size, measure the filters you intend to use. Then make the case opening ⅛" larger in width and height. This way the filters will fit well.

Also, to help the sliding panel open and close easily, it's 1/16" narrower than the fixed panel, see Exploded View. *(Continued)*

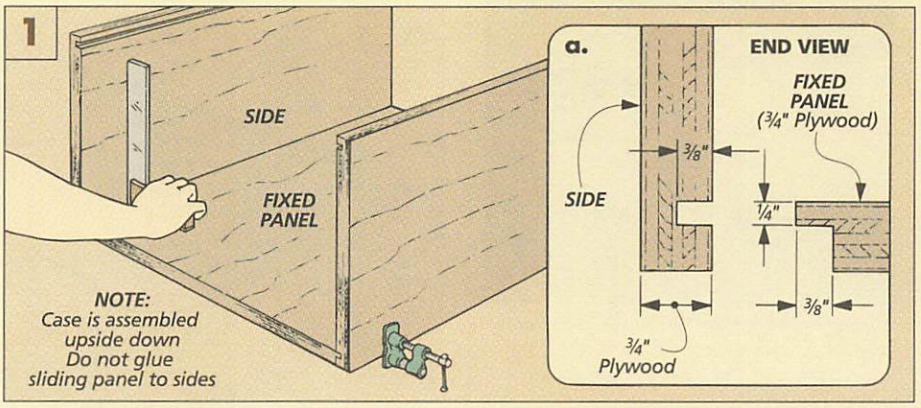

(*Continued from page 23.*)

LOCKING RABBET. To hold the filter case together, I used a locking rabbet joint, refer to Fig. 1a on the previous page. Like a plain rabbet joint, a locking rabbet provides an air-tight seal between the sides and the fixed panel. But it also has one other advantage. It allows the sliding panel to open and close without any special hardware.

ASSEMBLY. When both the tongues and the grooves have been cut in the case pieces, the filter case can be glued up, refer to Fig. 1 on previous page. The easiest way to do this is to build it upside down. (Since the sliding panel isn't glued into the sides, I set it aside for now.)

FURNACE FILTERS & BLOWER

When the filter case is assembled, there needs to be some way of positioning the furnace filters and blower inside. To do this, I added simple frame cleats, see Figs. 2 and 3. These cleats are ¾"-square strips of hardwood that are screwed to the inside of the case to form a frame.

There's only one thing really critical with these cleats. They must end up flush with the grooves in the sides, see Fig. 3a. This ensures a tight seal between the cleats and the sliding panel. Which is especially important since this panel isn't glued in place.

Note: Most of the cleats are screwed to the case with 1¼" woodscrews, see Fig. 3. But since the last cleats are screwed into the end grain of the side cleats, I used 1¾" woodscrews for extra strength.

FILTER FRAMES. The Shop Filter requires five sets of frame cleats to hold the filters, see Fig. 2. Three sets sandwich the two intake filters. Two sandwich the exhaust filter.

To allow for the filters, space the frame cleats 1" apart, see Fig. 2. I experimented with the spacing here. If you sandwich the filters any tighter, they're harder to change because they tend to catch on the cleats.

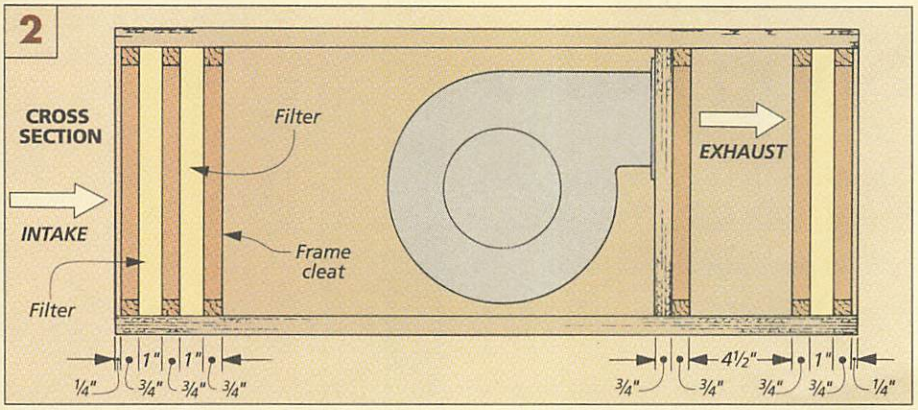

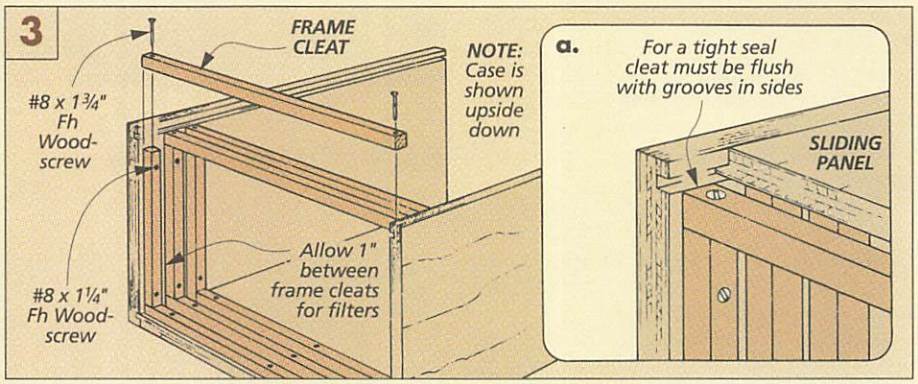

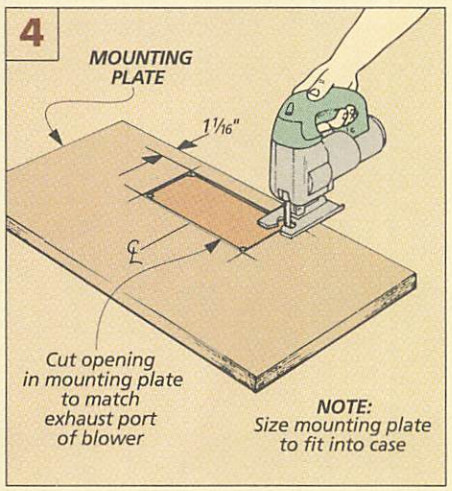

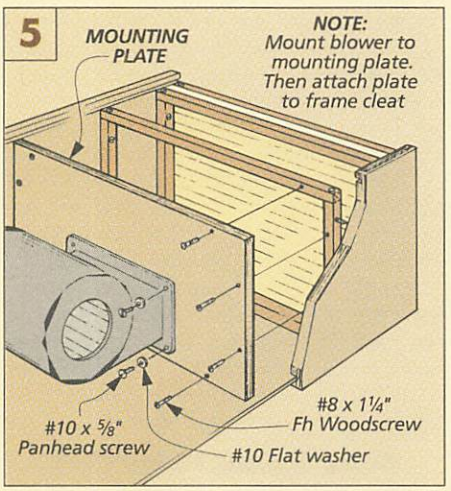

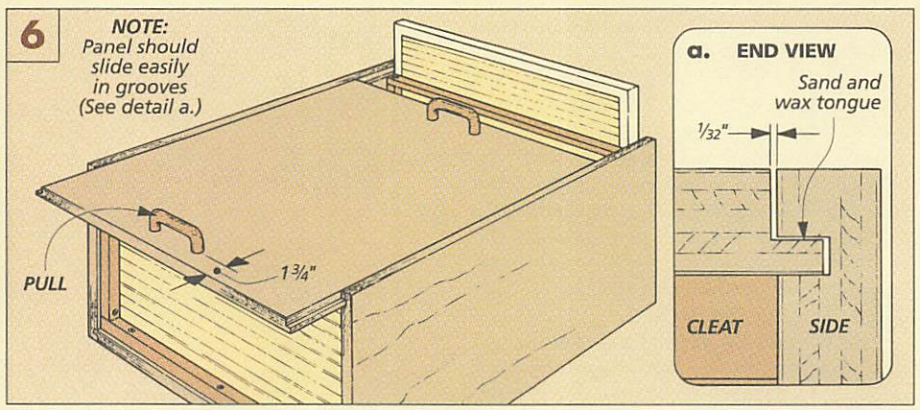

FURNACE FILTERS

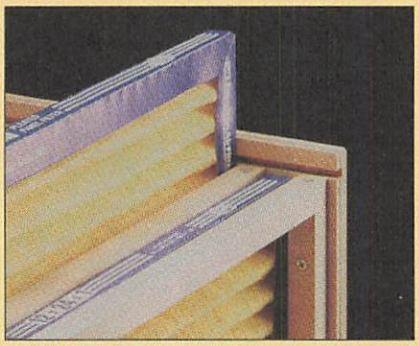

Pleated filters use a cloth-like material and have more surface area. So they're more efficient than fiberglass mesh.

MOUNTING THE BLOWER. There's one last set of cleats that form a frame near the center of the case, see Fig. 2. This frame supports the blower. But I couldn't screw the blower directly to the frame. Instead, I made a mounting plate out of plywood, see Fig. 4.

To make the mounting plate, first I cut the piece of plywood to fit inside the case. Then I cut an opening in the plate to match the exhaust port on the blower, see Fig. 4.

Screw the blower to the mounting plate first, see Fig. 5. Then screw the plate to the center cleats.

FITTING THE PANEL. The last step is to install the sliding panel that was made earlier, see Fig. 6. This panel already has a tongue that fits the grooves in the case sides. But at this point, the fit is tight. So sand the tongue until it slides smooth, see Fig. 6a. (A little wax will help too.)

Finally, I attached pulls near the ends of the sliding panel, see Fig. 6. These pulls give you something to grab onto when sliding the panel open to change the filters.

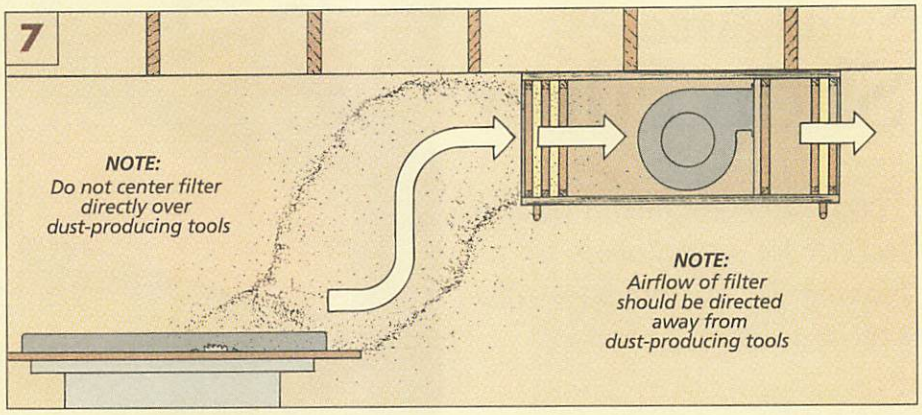

LOCATING THE UNIT

After the Shop Filter is complete it can be installed in the shop. But where?

The obvious answers are the ceiling and wall. But there's something to consider first.

This filter unit should be located so all the dust is drawn into the intake filters, see Fig. 7. This means you don't want it centered *directly* over a dust-producing machine like a table saw or sanding table. The reason is simple. You don't want to blow dusty air around. Just clean air.

CEILING-MOUNTED. If you decide to suspend the filter unit from the ceiling, all you will need to do is screw it to the ceiling joists, see Fig. 8.

But be careful. This filter unit isn't light. So before you attempt to mount it, locate and drill the mounting holes first. Then be sure to get plenty of help when lifting the filter into position.

And if your ceiling is low (as in a basement), make sure to locate it so you won't be knocking your head all the time. (Woodworking has enough potential hazards without adding head injuries to the list.)

WALL-MOUNTED. If you decide to mount the filter unit to the wall, it can be screwed into the studs, see Fig. 9. But if you go this route, make sure it has a fairly open run of wall space. The shop filter won't be nearly as effective at circulating the air if it has to push it around cabinets or stationary tools.

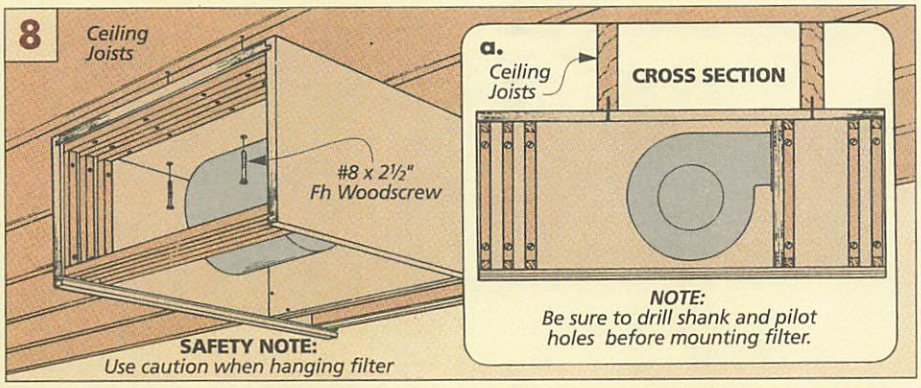

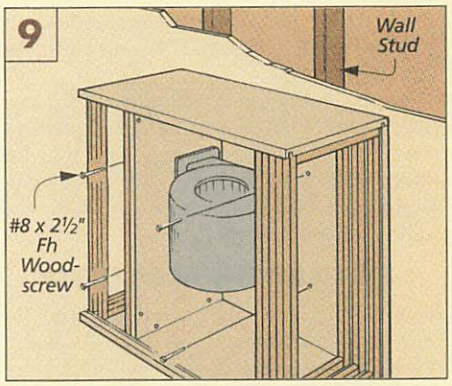

WIRING THE HEAVY-DUTY FILTER

To wire the Heavy-Duty Shop Filter, a hole is cut in the side of the filter case, see Fig. 1. This hole is sized to fit a rubber cord protector. (The protector keeps the cord from getting bent.) The cord is fed through the protector. And the wires are attached to the motor wires with wire nuts.

To turn the filter on, you could just plug the cord in. But I added an "in-line" cord switch, see Fig. 2. This is a simple two-piece device that sandwiches the cord. The nice thing is you can locate it anywhere along the length of the cord.

Note: This wiring isn't hard, but if you're not comfortable with it, hire an electrician.

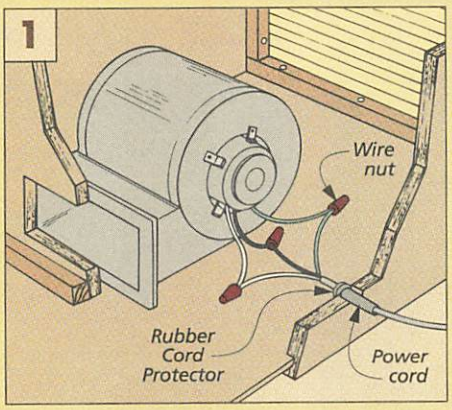

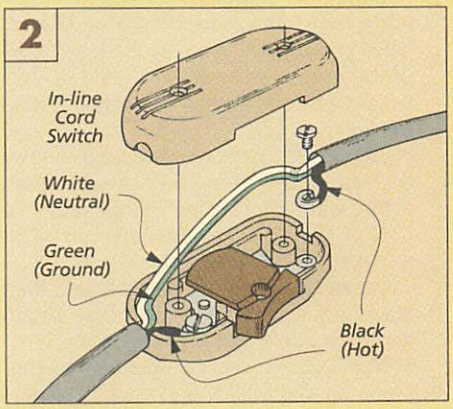

Small Area Shop Filter

This inexpensive filter is the perfect size for a small shop. Or for filtering the air around a table saw or a stationary sander.

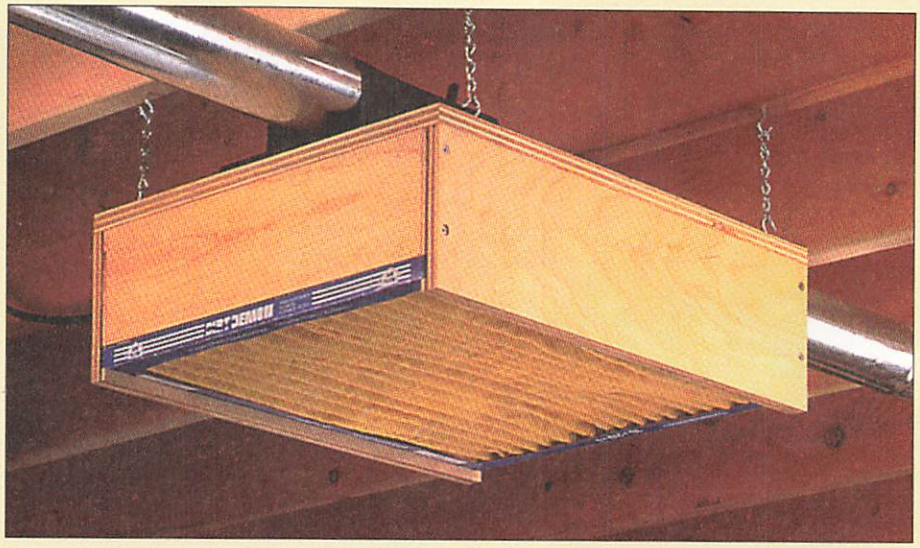

Instead of three furnace filters, this Small Area Filter uses only one. And to circulate the air around the shop, it uses two bathroom exhaust fans instead of a heavy-duty blower. These inexpensive fans are readily available at home centers — I bought mine for about $10 each. (For a complete list of supplies, see Sources on page 31.)

So while this filter isn't really big enough for a large shop, it's the perfect size for a small one. Or for filtering the air around one or two dust-producing tools like a table saw or a stationary sander.

The Area Filter is just a simple plywood case, see the Exploded View. The exhaust fans are attached to the top of the unit. The single 16" x 20" furnace filter slides into grooves in the sides and becomes the bottom of the case.

Note: Here again, I used pleated furnace filters — not your typical fiberglass mesh filters, refer to the box on page 24. Also, the filters won't be exactly 16" x 20". They'll be slightly smaller. So measure your filter and build the case around it.

EXPLODED VIEW

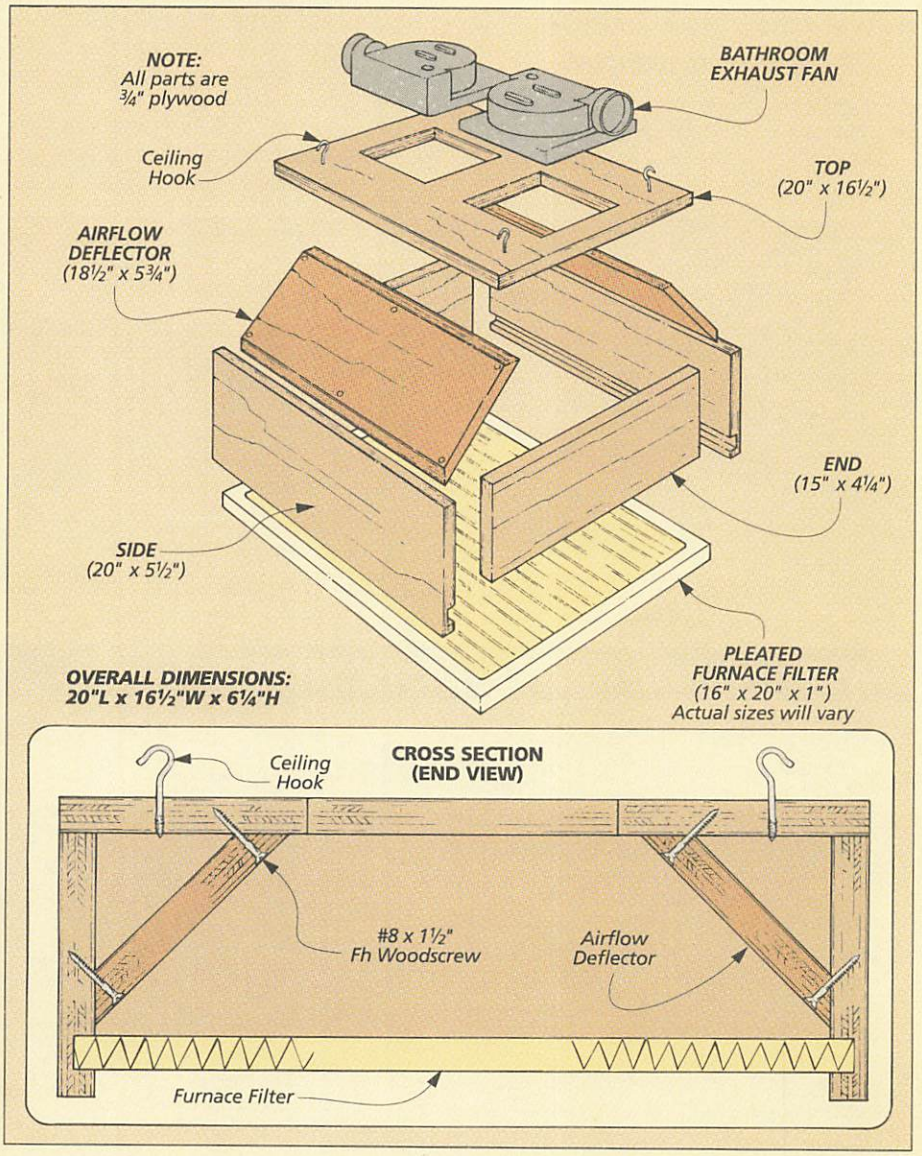

BUILDING THE AREA FILTER

To build the Area Filter, start by cutting the case sides to finished size, see Exploded View. (The length of the sides should match the length of the filter.)

Next, cut ½"-deep grooves in the sides to hold the furnace filter, see Fig. 1.

CASE ENDS. After the grooves have been cut, the next step is to add the ends. But the ends aren't the same width as the sides. They're cut so they end up flush with the top of the groove in each side, see Fig. 1. This way, the filter will slide in easily but will still keep a tight seal.

The length of the ends depends on the actual size of the filter. They should equal the actual width of the filter minus ⅞".

Now, the sides and the ends can be glued and screwed together, see Fig. 1.

CASE TOP. The next step is to add the top, see Fig. 2. It's cut to cover the case assembly and then glued and screwed in place.

Now cut two square openings in the top piece for the intake ports on the fans, see Fig. 2. (Make them ½" smaller in both di-

rections.) But don't attach the fans quite yet. There are a couple things to do first.

AIRFLOW DEFLECTORS. To make the airflow more efficient, I added two deflectors to direct the flow of the air into the fans, see Fig. 3 and the detail in the Exploded View.

Also, it's much harder to wire the fans after they've been attached to the case. So do all the wiring now, see box below.

ATTACH FANS. When the wiring is done, the Area Filter is just about complete. All that's left is to attach the fans.

To do this, I didn't glue or screw them in place. Instead, I used siliconized latex caulking to create an air-tight seal, see Fig. 4. (I found out the hard way that regular silicone caulking won't adhere to the plastic bodies on the exhaust fans.)

LOCATING THE FILTER

After the caulk is dry, the last step is to hang the filter unit. But before you do this, the unit needs a slight modification.

AIRFLOW PROBLEM. There was a bit of a problem with the exhaust ports on the fans. They pushed the filtered air away with such force that they disturbed the dusty air below the filter. So what ended up happening was a lot of the dusty air never got pulled through the filter.

EXHAUST PIPES. But there's an easy solution. I added a 24" length of 3"-dia. duct to extend the exhaust ports away from the unit, see Fig. 5. This way, the dusty air hangs beneath the unit until it can be drawn up through the filter.

HANGING THE FILTER. To hang the Area Filter, you can't just screw it in place. The two fans are in the way. So the unit has to be suspended from the ceiling. To do this, I used ceiling hooks and some short lengths of chain, see Fig. 5.

And finally, since the fans draw the air straight up through the filter, this unit works best if it's suspended directly above a tool that creates a lot of dust. ❑

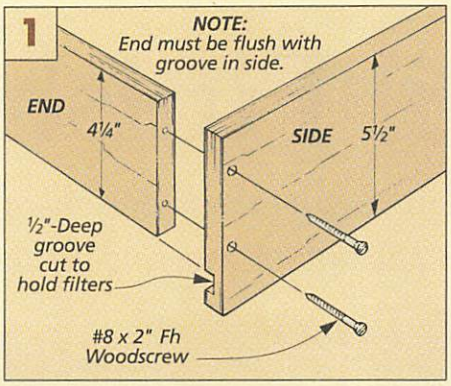

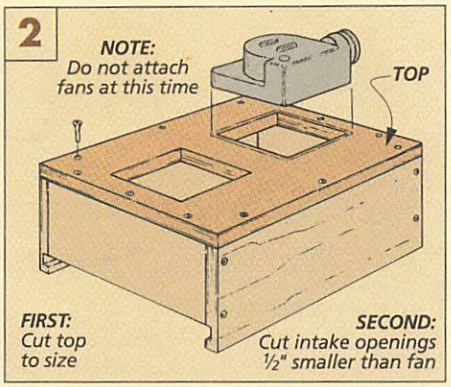

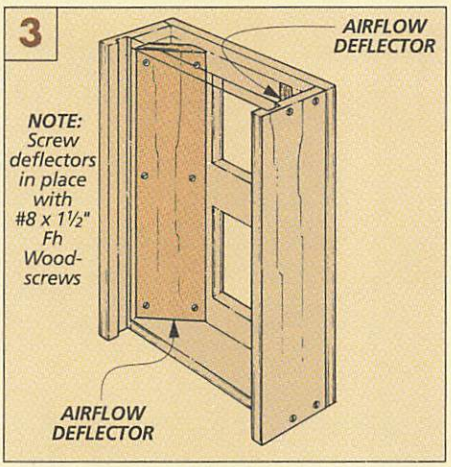

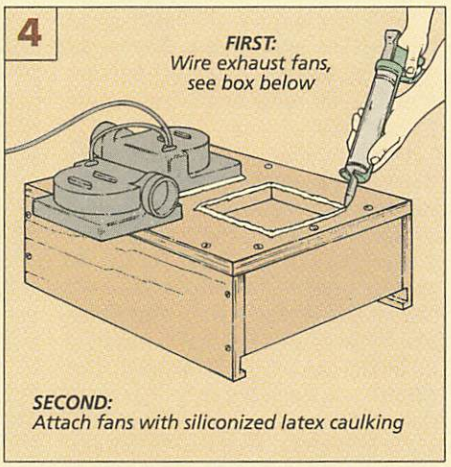

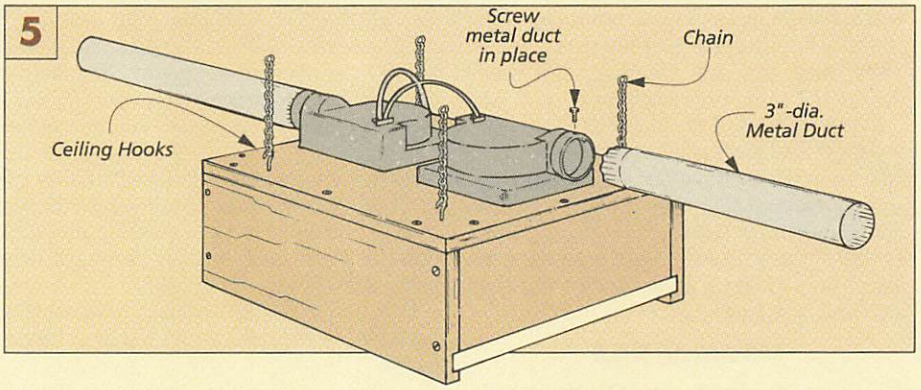

WIRING THE AREA FILTER

Wiring this Area Filter is a bit different than wiring the Heavy-Duty Filter.

First of all, I found that the motors should be wired *before* they're attached to the filter case. It can be done afterwards, but it's like building a ship in a bottle.

Another twist is that there are two motors to wire, not just one. To do this, I wired the plug to one motor, then connected the two motors with a jump wire, see Drawing. (For a list of electrical supplies, see page 31.)

Also, to make the unit easier to turn on and off, I added an "inline" cord switch, see Fig. 2 in the box on page 25.

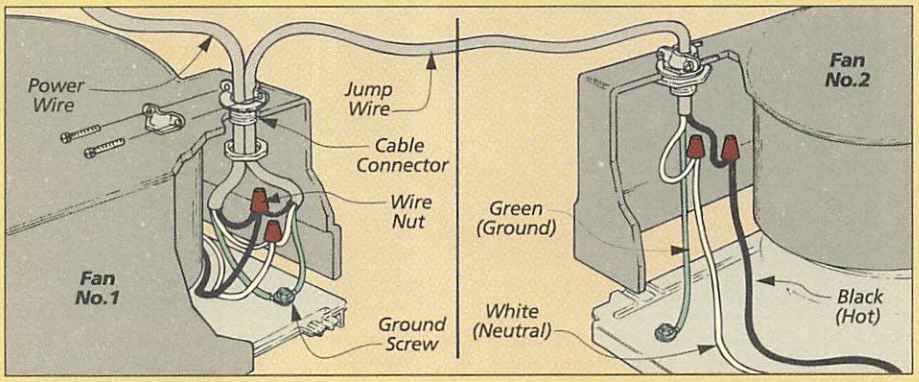

Oil Finishes

There are lots of oil finishes on the shelves these days — some better than others. Here are a few tips for choosing the right one for your project.

An oil finish is an oil finish. Just wipe it on, let it soak in awhile, then wipe off the excess. Right?

Well, yes and no. Oil finishes can be wiped on and off. But they're not all alike. In fact, many oil finishes aren't really "oils" at all. Sound confusing? It is.

Unfortunately, the manufacturers don't offer much help. The container rarely tells what's in the finish. And even the names can be confusing.

THE NAME GAME. Take "tung oil" as an example. I'd expect Behlen's Tung Oil, Formby's Tung Oil Finish, and Minwax's Tung Oil Finish would all be the same *type* of oil finish. But they're not. Each is different, refer to the photos below.

Or how about Watco's Danish Oil, Minwax's Antique Oil, and Behlen's Salad Bowl Finish. These products sound very different. But they're not. They may not be identical, but they're the same *type* of oil finish.

TYPES OF OILS. I arrange oils into three groups: natural oils, processed oils, and oil/varnish blends. And there are some important differences between them. Some look more "natural" but don't protect as well. Others provide more protection because they build up a glossy film, but they also look less "natural."

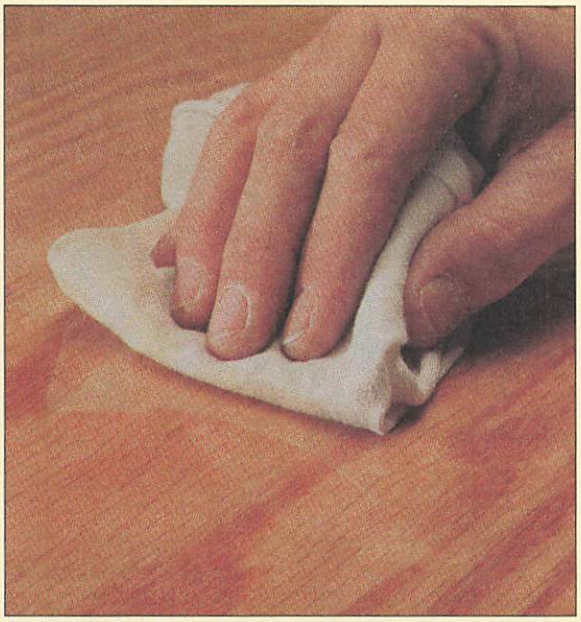

▲ *Oil finishes are some of the easiest finishes to apply. But that doesn't mean they all work equally well. Some dry quicker and offer more protection than others.*

NATURAL OILS

There are actually two kinds of natural oils: non-drying and drying, see left photo.

Non-drying oils, like mineral oil, may be used for salad bowls and cutting boards, see "Safe" Finishes, next page. But oils that don't dry are poor finishes for most projects. They're just not durable.

Other oils, like linseed and tung oil, dry (or cure) as they react with oxygen. Unfortunately, this can take a long time to happen. Tung oil requires a few days to dry between coats. And linseed oil takes even longer.

Because of the long drying times, natural oils often have metallic driers added to them or are thinned with mineral spirits. These additives help the oils cure faster. "Boiled" linseed oil dries in a day. (But it isn't really boiled. It has metallic driers in it.)

If the drying time wasn't bad enough, natural oils don't offer much protection. The problem is they don't dry hard. They're always a bit soft, like rubber. (One way to see this is to put a drop on a piece of glass, see photos next page.) Which means you can't build up a hard, protective film.

The only time I'd consider using a natural oil is for a cutting board or a kitchen utensil, see box at right. Otherwise, they dry too slow and just don't offer much protection.

PROCESSED OILS

One way to improve natural oils is to "cook" or process them. If the oil is heated and special solids (called resins) are added, the oil changes. It becomes varnish.

WIPING VARNISH. This discussion isn't about varnish. But if you thin down varnish, it can be applied a lot like oil — you can wipe it on and off in thin coats. In fact many popular oil finishes are really "wiping varnishes," see center photo below.

A wiping varnish cures much faster than natural oil. And it cures hard, see photos next page. So you can build up relatively thick coats of finish, depending on the pro-

Natural Oils. *Some natural oils will take several days to dry. Others never dry at all. Neither type of oil offers much protection.*

Processed Oils. *Processed oils, like these wiping varnishes, cure harder and faster than natural oils and offer more protection.*

Oil/Varnish Blends. *A mix of oil and varnish gives more protection than oil, less gloss than varnish. Plus, it's the easiest to apply.*

tection needed. This film is a bit glossier. But that's the trade-off with oils: you get either a "natural" look or glossy protection.

Wiping varnishes are the oil finishes I use most. They offer the best protection for the best price of all the oil finishes. I will use wiping varnishes on almost every type of furniture. (The exceptions are projects that get a lot of abuse, like dining tables or desk tops. For these, I typically use straight varnish.)

POLYMERIZED OILS. Actually, there's another way to process natural oil to make it better. By heating the oil under special conditions, it becomes "polymerized."

Like wiping varnish, polymerized oil cures much more quickly. And it cures hard, so you can build up a protective film. But once again, the thicker the coat of finish, the less "natural" the wood looks.

Polymerized oil is a good finish, and I would use it more often. But there are two problems. It's not commonly available, and it's very expensive. The only polymerized oil I know of that's available is a tung oil made by Sutherland Welles, and it costs over $20 a quart, see page 31.

OIL/VARNISH BLENDS

There is a happy medium between natural oils and processed oils — just combine the two. This type of oil is called an oil/varnish blend, see right photo on previous page.

Oil/varnish blends have some of the advantages of oil finishes. They're very easy to apply and have a "natural," satin look. But because of the varnish, the finish also dries quicker and provides more protection than pure oil. The oil still doesn't cure completely hard. But it's a definite improvement.

I would recommend using an oil/varnish blend whenever you want a quick, easy finish but don't need a lot of protection. Projects like clocks, picture frames, and small decorative boxes, for instance.

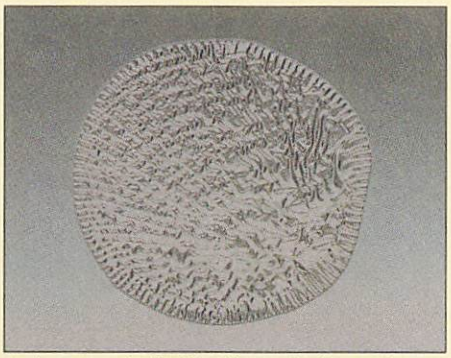

▲ *A natural oil, like linseed oil, won't protect well, as this wrinkled sample shows. It stays soft. It won't dry hard and smooth.*

▲ *Wiping varnishes and polymerized oils cure hard and smooth. So you can build up a relatively thick layer of protection.*

"SAFE" FINISHES

I'm often asked which type of finish to use on toys and eating utensils.

The easiest answer is to suggest one that's sold as "non-toxic." But this implies that other finishes are harmful, and this isn't necessarily true. Most of the solvents evaporate as finishes cure.

So are finishes really dangerous? *Once they've cured completely,* most may be safe — but they may not be. That's the problem. No one really knows for sure.

To be on the safe side, you can use a finish approved for human consumption, like mineral oil or walnut oil. (Take a look at our cutting board finish on page 19.) But these oils don't provide much protection, and they need to be reapplied often.

For a more durable finish, use an oil/varnish blend, and let it cure completely. At least it won't flake off with use.

But many times, no finish is the best finish. And most toys and eating utensils will work just as well without it.

WORKING WITH OIL FINISHES

Oil finishes are probably the easiest finishes to work with, see "Finishing Notes" at right. Because the coats are so thin, they brush or wipe on without any problems. But there are some subtle differences between the three types of oils.

NUMBER OF COATS. With natural oils and oil/varnish blends, you don't need to apply more than three or four coats. Since the oil stays soft even after it's cured, you can't build up a protective layer of film anyway. On the other hand with polymerized oil and wiping varnishes, you can build up more protection by applying more coats.

DRYING TIME. There's another thing to mention about the processed oils. They can dry very quickly. On a hot day you may find the finish is already tacky after only a couple minutes. So if the wood starts to look dry, add more finish. If it does get tacky, just apply more oil and wipe it off right away.

SMOOTH FINISH. Getting a smooth finish with oils is easy. Lightly sand in the final coat of finish with 320-grit wet/dry paper while it's still wet. Then wipe away the slurry.

BLEEDING FINISH. Once the finish has been wiped off, it's not a good idea to just go off and forget about it. Occasionally with the first couple of coats, the finish will "bleed" a little. What happens is the oil comes back out of the pores and then hardens on the surface in little spots.

There's not much you can do to prevent bleeding. But you can eliminate the spots by wiping them away before they dry. Checking the piece every hour or so is enough.

MAINTAINING OIL FINISHES. There's another thing to mention about oil finishes. They can look "dried out" or worn after awhile. So an oil finish needs to be rejuvenated periodically. But there's no trick here. Just clean it and apply a new coat of oil. Small nicks and scratches will blend in. And the sheen will return.

SAFETY. Oil finishes are so easy to use they seem harmless. But they can spontaneously combust if you wad the rags up and throw them in a pile (or a garbage can).

To prevent this, lay the rags out flat or hang them up until they are stiff and dry. Then they can be thrown away safely. ❑

FINISHING NOTES

1. **Sand to 150 or 180-grit. Clean surface with vacuum or tack rag.**
2. **Apply the first coat liberally. (I prefer a foam brush.)**
3. **Let oil sit 5-10 minutes. If the wood looks dry, apply more oil.**
4. **Wipe off excess oil. If tacky, apply more oil and wipe off immediately.**
5. **Allow oil to dry completely. Check regularly for any "bleeding."**
6. **For a smooth final coat, sand in the finish with 320-grit sandpaper.**

Fluting Jig

When I first saw the shop drawings for the Bookcase in this issue, I was pleased. Nice design, basic joinery, and useful, too. Then I saw the flutes (grooves running up and down the vertical caps), see the photo on page 6. These would be interesting.

My first question was how to make the flutes. Right away I knew it would be with a core box bit in the router. But what's the best way to rout the flutes an equal distance apart? What was needed was some sort of indexing jig for guiding the router.

The jig in the photo is the result. It has just two main parts. A piece of Masonite that replaces the base plate on the router, see Fig. 1. And a set of strips attached to the Masonite that are for spacing the cuts.

SPACER STRIPS. The spacer strips are the key to the jig. The width of the spacers is the critical dimension — it should equal the desired distance between the centers of the flutes, see Fig. 1b.

The two outside strips act as fences for guiding the jig on the workpiece, see Fig. 1a.

BASE PLATE. The base plate should be cut long enough to accommodate the strips on either side of the router bit *plus* the width of the workpiece, see Fig. 2 below.

Then cut two slots parallel to the long edge of the plate. These are for securing the strips, see Fig. 1.

SET-UP. Before the jig can be used, both the router and the jig need to be set up. This is the trickiest part of the whole operation.

First, the spacer strips need to be positioned in relation to the router bit, see first drawing in Fig. 2.

Then the clamping strip needs to be positioned so it rides along the other edge of the workpiece, see second drawing in Fig. 2.

Now the router bit can be adjusted to the desired depth of the flutes. And the flutes can be routed one at a time, see box at right.

Shop Note: It's a good idea to start with a test piece to get a feel for using the jig. And it helps if the test piece is the same width as the actual workpiece.

STOPPED FLUTES. For stopped flutes, like on the Bookcase, simply clamp a block on each end of the workpiece, see Fig. 3. Locate the blocks so the router stops when the bit reaches the desired end of the flutes. ❑

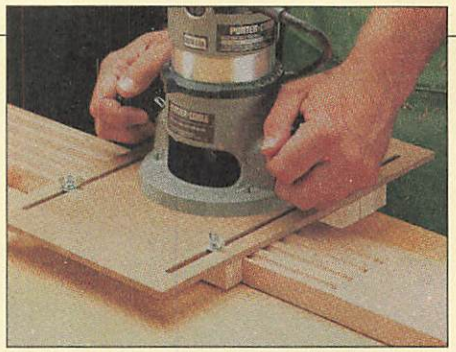

▲ *A simple jig is all that's needed to rout perfectly spaced flutes. The secret is a set of spacer strips that act like movable fences.*

ROUTING FLUTES

This Fluting Jig works like a Chinese abacus. A set of spacer strips fit around the workpiece and act as sliding fences for guiding the router in a straight line.

The first flute is routed to leave a narrow shoulder along the edge of the workpiece, see first drawing below.

After the first flute has been routed, one spacer strip is moved to the opposite side of the workpiece, second drawing. All the remaining flutes are routed in the same way. Make a pass, slide one strip, make another pass, third drawing.

Finally, the piece can be cut to finished length (for stopped flutes), see Fig. 3. Or ripped to finished width (for half flutes).

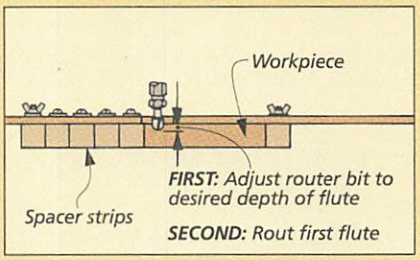

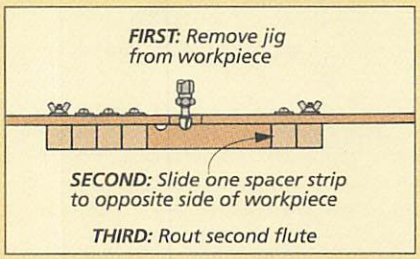

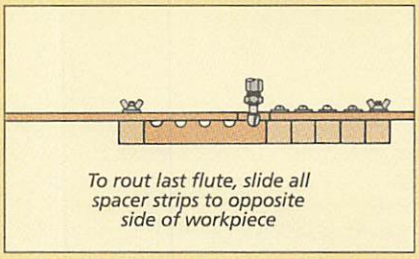

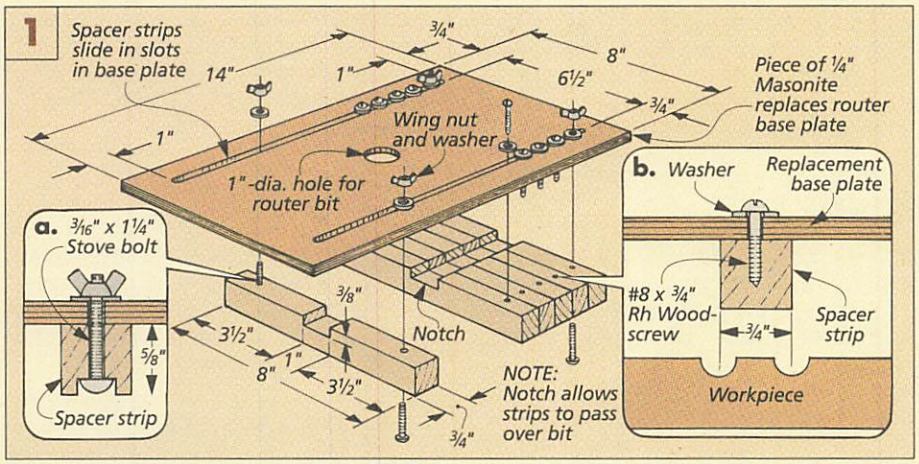

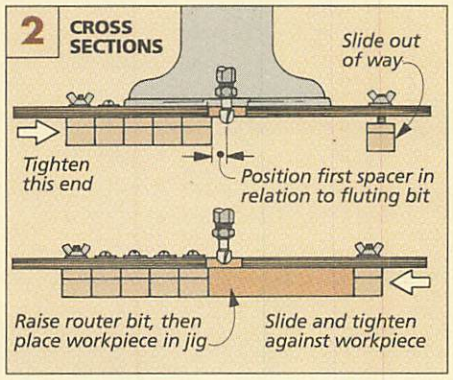

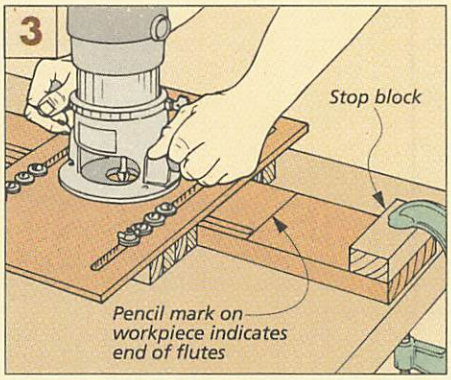

Sources

BOOKCASE

To build the Bookcase on page 6, I used a lot of hardware commonly available at local home centers and hardware stores.

Note: The shelf standards and supports are anodized brown. This color blends well with the cherry stain we used, see below. The Woodworkers' Store sells these 72" shelf standards, but they call it "walnut" (catalog #34058 and 33852), see the mail order sources listed below.

The following is a list of everything you'll need:

- (4) 72" Shelf Standards (Brown)
- (52) Nails (Brown)
- (20) Shelf Supports (Brown)
- (2) 1⅛"-dia. Levelers with T-Nuts
- (8) ¼-20 x 3" Hex Head Bolts
- (8) ¼" Flat Washers
- (8) ¼-20 T-Nuts
- (68) #8 x 1¼" Fh Woodscrews

FINISH. To finish the Bookcase, I used Bartley's Gel Finishes. First, I stained the wood with Pennsylvania Cherry. Next I wiped on three coats of their Clear Varnish. (I ended up using about a pint of each.) Bartley finishes are available from some woodworking stores and the sources listed below.

FLUTING JIG

The Fluting Jig on page 30 requires a few common wing nuts. But to rout the flutes, you'll need a ⅜"-dia. Core Box bit (sometimes called a Round Nose bit), see sources listed below.

CUTTING BOARD

To make the feet for the butcher block Cutting board on page 16, we used the following items:

- (4) 2¼"-dia. Maple Wheels
- (4) 5/16" x ¾" Rubber Bumpers
- (4) #6 x 1¼" Rh Woodscrews

The rubber bumpers and the woodscrews are common enough, but you may have a little trouble finding the wooden wheels if you don't have a woodworking store nearby. You can order them from mail order catalogs, see below, but many have minimum orders. You may also be able to find the wheels at a local craft store.

FINISH. Many finishes, such as Behlen's Salad Bowl Finish, are marketed as "non-toxic." But to finish the Cutting Board, I mixed a home-made finish with mineral oil and paraffin wax, see page 19.

OIL FINISHES

Oil finishes are available at most local hardware stores and home centers. They're also available through mail order catalogs, see the sources listed below.

POLYMERIZED OIL. If you are interested in finishing with polymerized tung oil, Sutherland Welles is the only manufacturer I know of. Welles' Polymerized Tung Oil Finishes are available through Garrett Wade, see the sources listed below.

HEAVY-DUTY FILTER

The Heavy-Duty Shop Filter on page 23 requires a squirrel-cage blower with an enclosed motor. The blower runs on 110 volts and moves 465 cfm of free air.

We ordered the blower directly from W. W. Grainger. Grainger is a national distributor with branches in most metropolitan areas. (Check your local yellow pages.)

Grainger is a wholesale distributor. So to order the blower from them, you'll need to work through an established business with a tax I.D. number. (The business does not need to be construction related.)

The blower you'll need to order is called a Shaded Pole Blower, Stock No. 4C448.

If you can't meet these qualifications, you may also be able to order the blower through a local hardware store. Or you can order the blower directly from *Woodsmith Project Supplies.*

W95-1104-120 Air Filter Blower.....$112.80

OTHER SUPPLIES. In addition to a blower, you'll also need 3 board feet of hardwood (I used maple), and a little over half a sheet of plywood. Plus, some furnace filters and other supplies. These supplies are available at local home centers.

- (3) 12" x 24" Furnace Filters
- (1) Electrical Cord with Plug
- (3) Wire Nuts
- (1) Rubber Cord Protector
- (1) "In-line" Cord Switch
- (2) Handles
- (56) #8 x 1¼" Fh Woodscrews
- (12) #8 x 1¾" Fh Woodscrews
- (4) #8 x 2½" Fh Woodscrews
- (5) #10 x ⅝" Panhead Screws
- (5) #10 Flat Washers

Note: Pleated filters cost more than the fiberglass type, but they work much better at filtering fine dust. They're certainly worth the extra few dollars.

AREA FILTER

For a less expensive filter, you can build the Area Filter shown on page 26. This filter unit uses two bathroom exhaust fans, available at local home centers.

In addition to the fans, you'll also need a quarter sheet of plywood, one furnace filter, and some other supplies.

- (1) 16" x 20" Furnace Filter
- (1) Electrical Cord with Plug
- (4) Wire Nuts
- (2) Romex Cable Connectors
- (1) "In-line" Cord Switch
- (8) Ceiling Hooks
- (1) Chain (length will vary)
- (2) 3"-dia. Metal Ducts, 24" long
- (20) #8 x 2" Fh Woodscrews
- (12) #8 x 1½" Fh Woodscrews

WOODSMITH PROJECT SUPPLIES

ORDER BY MAIL

To order by mail, use the order form that comes with the current issue. The order form includes information on sales tax as well as shipping and handling charges.

If the mail order form is not available, please call our Toll Free number at the right for more information on specific charges and any applicable sales tax.

ORDER BY PHONE

For fastest service use our Toll Free order line. Open Monday through Friday, 7 AM to 7 PM Central Time.

Before calling, please have your VISA, MasterCard, or Discover Card ready.

1-800-444-7527

Note: Prices subject to change after December, 1994

MAIL ORDER SOURCES

Similar hardware and supplies may be found in the following catalogs. Please call each company for a catalog or information.

Constantines'
800-223-8087
Bumpers, Maple Wheels, Oil Finishes

Garrett Wade
800-221-2942
Polymerized Tung Oil, Oil Finishes, Router Bits

Highland Hardware
800-241-6748
Maple Wheels, Router Bits, Oil Finishes

Woodcraft
800-225-1153
T-nut Leveler, Router Bits, Bartley's Finishes, Oil Finishes

The Woodworkers' Store
800-279-4441
Bumpers, "Walnut" Shelf Standard, Oil Finishes, Bartley's Finishes

Woodworker's Supply
800-645-9292
T-nut Leveler, Router Bits, Oil Finishes

Final Details

Classic Bookcase

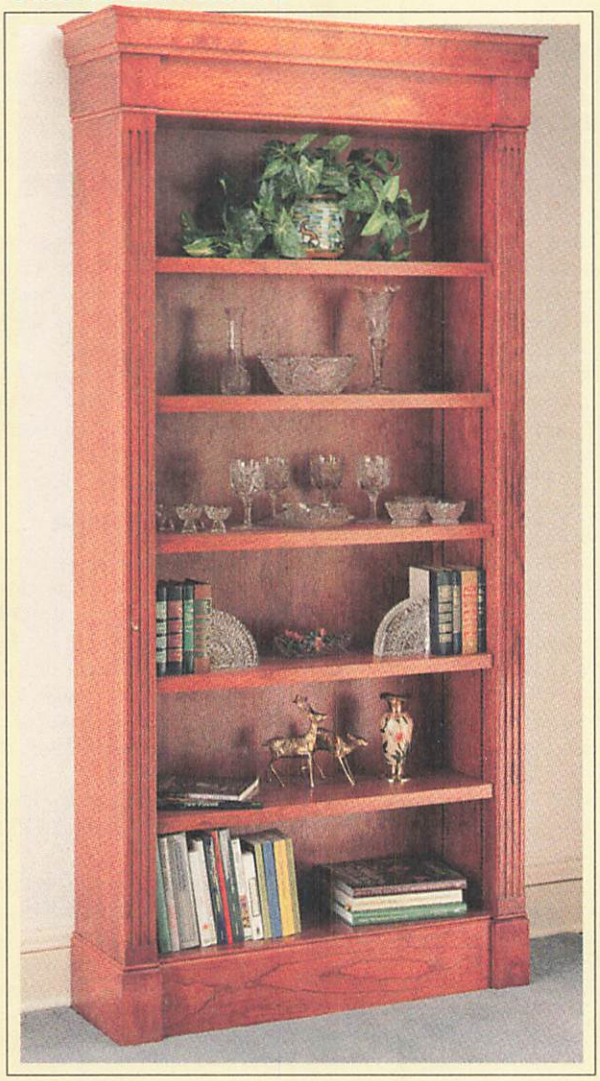

Cutting Board

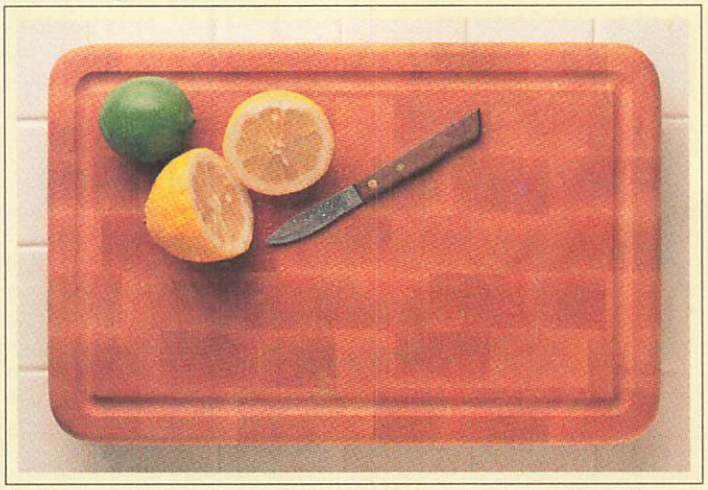

▲ *For durability, this Cutting Board is made from strips of maple with the end grain facing up. For comfort, the corners are rounded off. Finally, a shallow groove in the top prevents juices from dripping.*

◄ *There are two design options for the top of this Bookcase. This version features a simpler traditional-looking top made up of stacked molding.*

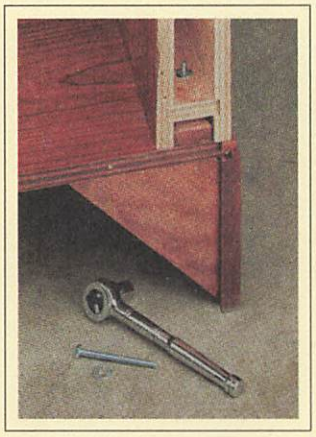

When the plywood back is removed, ► *there's easy access to the nuts and bolts that hold the Bookcase together.*

Clearing the Air

▲ *The pleated filter in this small filter unit is very effective at trapping airborne dust. Plus, the filter is easy to replace.*

▲ *We also show plans for a large air filter for a large work area. It has three filters that are also very easy to replace.*

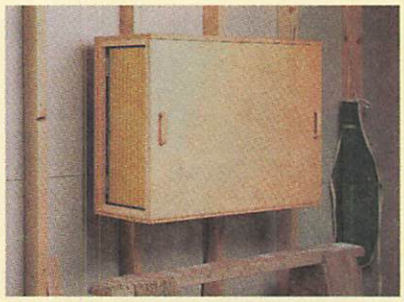

▲ *For the most versatility, the large filter unit can be mounted to the ceiling (left) or to a wall. Either way, it's highly efficient.*